ROTEX®

Torsionally flexible jaw-type couplings types
AFN, BFN, CF, CFN, DF, DFN
and their combinations
according to Standard 94/9/EC (ATEX 95)
for finish bored, pilot bored and unbored couplings

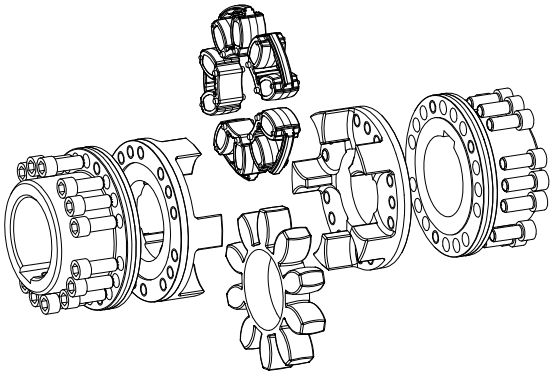

Type AFN

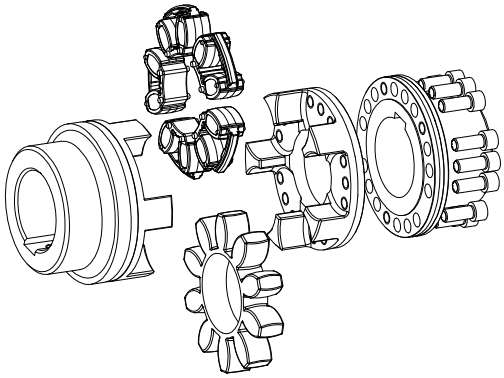

Type BFN

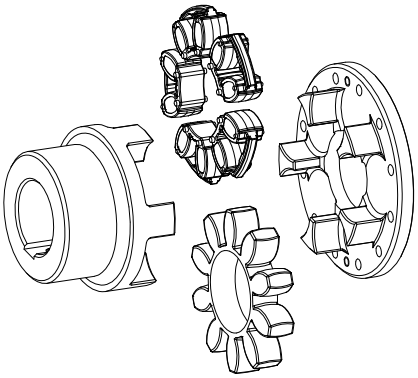

Type CF

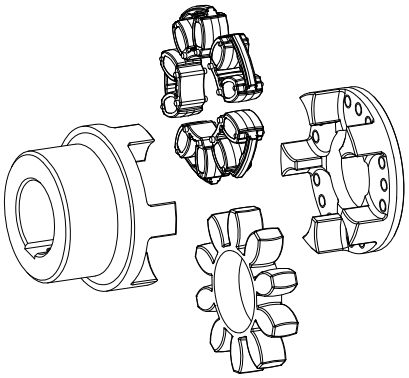

Type CFN

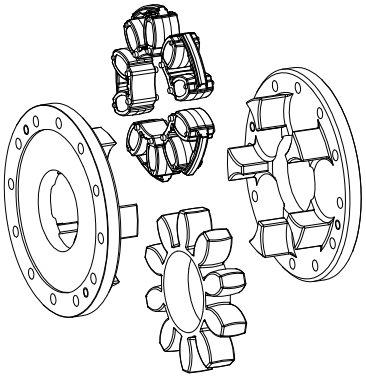

Type DF

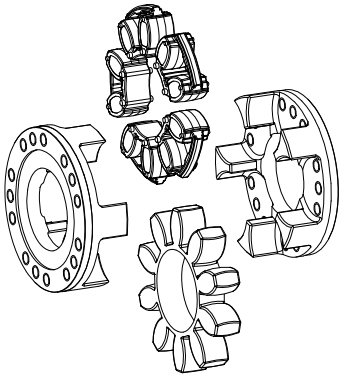

Type DFN

ROTEX® is a torsionally flexible jaw coupling. It is able to compensate for shaft displacement caused by, as an example, inaccuracies in production, heat expansion, etc.

- Type AFN allows to exchange the spider without having to disassemble the driving or driven machine.
- Type BFN ensures the power flow without having to disassemble the driving or driven machine and allows for radial disassembly without axial movement of the driving machine.
- Types CF, CFN, DF and DFN are flange designs.

Table of Contents

1 Technical Data

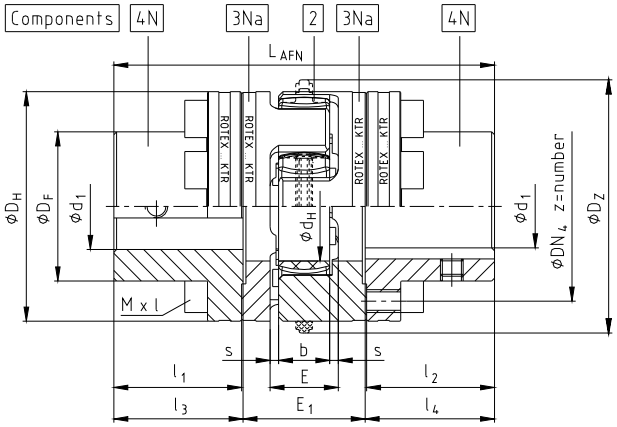

picture 1: ROTEX® type AFN

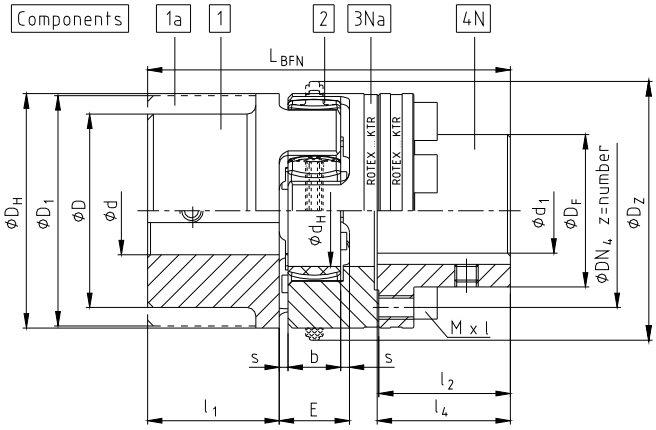

picture 2: ROTEX® type BFN

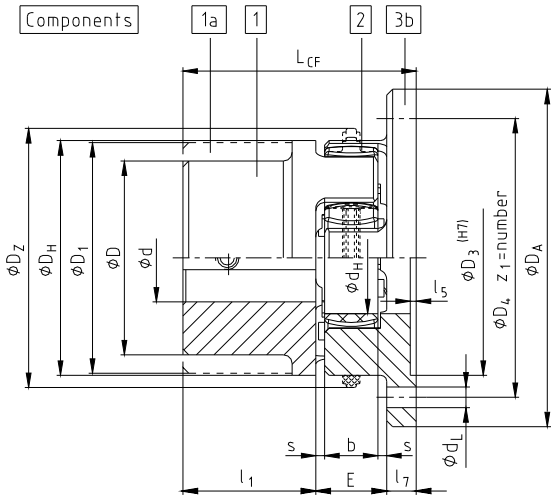

picture 3: ROTEX® type CF

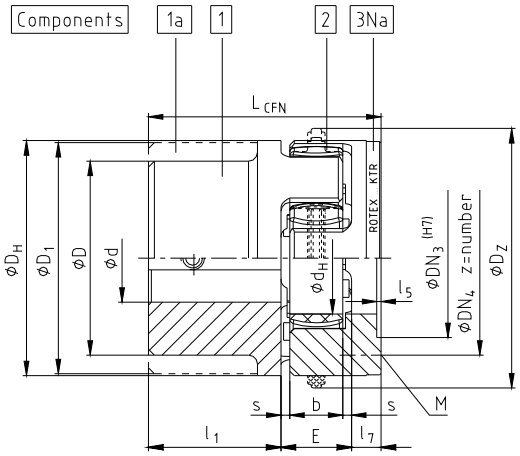

picture 4: ROTEX® type CFN

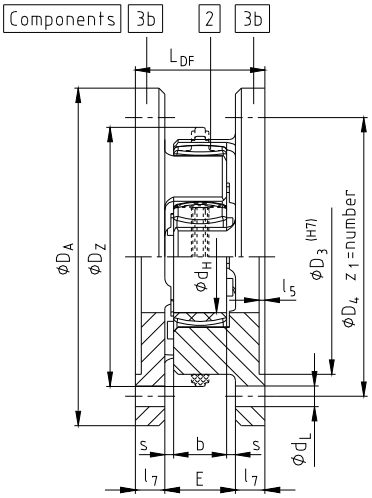

picture 5: ROTEX® type DF

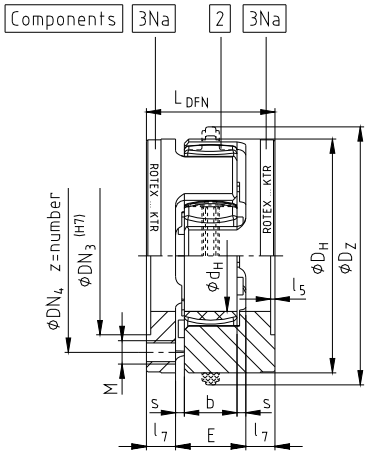

picture 6: ROTEX® type DFN

1 Technical Data

Table 1: technical data and dimensions

size	component	spider [1] (component 2) rated torque [Nm]			max. finish bore [2]			dimensions [mm]								
					d		component 4N									
					material [3]		d_1									
		92 ShA (yellow)	98 ShA (red)	64 ShD (green)		steel		D_H	D_Z	D_{Z1} [5]	d_H	D; D_1	E	E_1	s	b
24	1	35	60	75	24	-	24	56 [4]	-	-	27	40	18	33	2,0	14
	1a				28	35						56				
28	1	95	160	200	28	-	28	66 [4]	-	-	30	48	20	39	2,5	15
	1a				38	40						66				
38	1	190	325	405	40	48	38	80	-	-	38	66	24	43	3,0	18
	1a				48	-						78				
42	1	265	450	560	45	55	42	95	-	-	46	75	26	48	3,0	20
	1a				55	-						94				
48	1	310	525	655	52	62	48	105	-	-	51	85	28	50	3,5	21
	1a				62	-						104				
55	1	410	685	825	60	74	55	120	-	-	60	98	30	60	4,0	22
	1a				74	-						118				
65	1	625	940	1175	70	80	65	135	-	-	68	115	35	65	4,5	26
75	1	1280	1920	2400	80	95	75	160	-	-	80	135	40	75	5,0	30
90	1	2400	3600	4500	97	110	100	200	218	230	100	160	45	82	5,5	34
100	1	3300	4950	6185	115	-	110	225	246	260	113	180	50	97	6,0	38
110	1	4800	7200	9000	125	-	125	255	276	290	127	200	55	103	6,5	42
125	1	6650	10000	12500	145	-	145	290	315	330	147	230	60	116	7,0	46
140	1	8550	12800	16000	160	-	165	320	345	360	165	255	65	128	7,5	50
160	1	12800	19200	24000	185	-	190	370	400	415	190	290	75	146	9,0	57
180	1	18650	28000	35000	200	-	220	420	450	465	220	325	85	159	10,5	64

Table 2: continuation of dimensions

size	dimensions [mm]															
	D_A	D_F	D_3	DN_3	D_4	DN_4	l_1; l_2	l_3; l_4	l_5	l_7	L_{AFN}	L_{BFN}	L_{CF}	L_{CFN}	L_{DF}	L_{DFN}
24	80	36	55	36	65	45	30	30,5	1,5	8	94	86	56	56	34	34
28	100	42	65	44	80	54	35	35,5	1,5	10	110	100	65	65	40	40
38	115	52	80	54	95	66	45	45,5	1,5	10	134	124	79	79	44	44
42	140	62	95	65	115	80	50	51,0	2,0	12	150	138	88	88	50	50
48	150	70	105	75	125	90	56	57,0	2,0	12	164	152	96	96	52	52
55	175	80	120	84	145	102	65	66,0	2,0	16	192	176	111	111	62	62
65	190	94	135	96	160	116	75	76,0	2,0	16	217	201	126	126	67	67
75	215	108	160	112	185	136	85	86,5	2,5	19	248	229	144	144	78	78
90	260	142	200	145	225	172	100	101,5	3,0	20	285	265	165	165	85	85
100	285	158	225	165	250	195	110	111,5	4,0	25	320	295	185	185	100	100
110	330	178	255	180	290	218	120	122,0	4,0	26	347	321	201	201	107	107
125	370	206	290	215	325	252	140	142,0	5,0	30	400	370	230	230	120	120
140	410	235	320	245	360	282	155	157,5	5,0	34	443	409	254	254	133	133
160	460	270	370	280	410	325	175	177,5	5,0	38	501	463	288	288	151	151
180	520	315	420	330	465	375	195	198,0	5,5	40	555	515	320	320	165	165

Table 3: dimensions of bores of driving/coupling flanges

size	24	28	38	42	48	55	65	75	90	100	110	125	140	160	180
Mxl	M5	M6	M8	M8	M8	M10	M10	M12	M16	M16	M20	M20	M20	M24	M24
l	16	20	22	25	25	30	30	40	40	50	50	60	60	70	80
d_L	4,5	6,6	6,6	9,0	9,0	11,0	11,0	13,5	13,5	13,5	18,0	18,0	22,0	22,0	26,0
z	8	8	8	12	12	8	12	15	15	15	15	15	15	15	18
z_1	5	6	6	6	8	8	10	10	12	12	12	16	16	16	16
pitch [6]	8x45°			16x22,5°		8x45°	16x 22,5°	20x18°							24x 15°
T_A [Nm]	10	17	41	41	41	83	83	120	295	295	580	580	580	1000	1000

1) maximum torque of the coupling $T_{Kmax.}$ = rated torque of the coupling $T_{K\,Nenn.}$ x 2
2) bore H7 keyway to DIN 6885 sheet 1 [JS9] with thread for setscrew
3) size 24 and 28 material: Al-D; size 38 to 90 material: EN-GJL-250 (GG 25); size 100 to 180 material: EN-GJS-400-15 (GGG 40)
4) material steel: size 24 = 55 mm; size 28 = 65 mm
5) D_{Z1} = internal diameter of housing
6) Thread in the driving flange between the cams.

ROTEX® couplings with attached parts that can generate heat, sparks and static charging (e. g. combinations with brake drums, brake disks, overload systems like torque limiters, impellers etc.) are <u>not</u> allowed for the use in hazardous areas.
A separate checking must be made.

2 Hints

2.1 Coupling Selection

C A U T I O N !
For a continuous and troublefree operation of the coupling it must be designed according to the selection instructions (according to DIN 740 part 2) for the particular application (see ROTEX® catalogue).
If the operating conditions (performance, speed, changes at engine and machine) change, the coupling selection must be checked again.
Please make sure that the technical data regarding torque only refers to the spider. The transmissible torque of the shaft/hub connection must be checked by the orderer, and he is responsible for the same.

For drives with endangered torsional vibration (drives with periodical load on torsional vibration) it is necessary to make a torsional vibration calculation to ensure a perfect selection. Typical drives with endangered torsional vibration are e. g. drives with diesel engines, piston pumps, piston compressors etc. On request KTR makes the coupling selection and the torsional vibration calculation.

2.2 General Hints

Please read through these mounting instructions carefully before you set the coupling into operation.
Please pay special attention to the safety instructions!

The **ROTEX®** coupling is suitable and approved for the use in hazardous areas. When using the coupling in hazardous areas please observe the special hints and instructions regarding safety in enclosure A.

The mounting instructions are part of your product. Please keep them carefully and close to the coupling.

2.3 Safety and Advice Hints

STOP	**D A N G E R !**	**Danger of injury to persons.**
!	**C A U T I O N !**	**Damages on the machine possible.**
☞	**A T T E N T I O N !**	**Pointing to important items.**
Ex	**P R E C A U T I O N !**	**Hints concerning explosion protection.**

2 Hints

2.4 General Hints of Danger

D A N G E R !
With assembly, operation and maintenance of the coupling it has to be made sure that the entire drive train is protected against unintentional engagement. You can be seriously hurt by rotating parts. Please make absolutely sure to read through and observe the following safety instructions.

- All operations on and with the coupling have to be performed taking into account "safety first".
- Please make sure to disengage the power pack before you perform your work.
- Protect the power pack against unintentional engagement, e. g. by providing hints at the place of engagement or removing the fuse for current supply.
- Do not touch the operation area of the coupling as long as it is in operation.
- Please protect the coupling against unintentional touch. Please provide for the necessary protection devices and caps.

2.5 Proper Use

You may only assemble, operate and maintain the coupling if you

- have carefully read through the mounting instructions and understood them
- had technical training
- are authorized to do so by your company

The coupling may only be used in accordance with the technical data (see table 1 to 3 in chapter 1).
Unauthorized modifications on the coupling design are not admissible. We do not take any warranty for resulting damages. To further develop the product we reserve the right for technical modifications.
The **ROTEX®** described in here corresponds to the technical status at the time of printing of these mounting instructions.

3 Storage

The coupling hubs are supplied in preserved condition and can be stored at a dry and roofed place for 6 - 9 months.
The features of the coupling spiders (elastomers) remain unchanged for up to 5 years in case of favourable stock conditions.

C A U T I O N !
The storage rooms may not include any ozone-generating devices, like e. g. fluorescent light sources, mercury-vapour lamps or electrical high-voltage appliances.
Humid storage rooms are not suitable.
Please make sure that there is no condensation. The best relative air humidity is under 65%.

4 Assembly

Basically the coupling is supplied in individual parts. Before assembly the coupling has to be controlled for completeness.

4.1 Components of Couplings

Components of ROTEX® type AFN

Compo-nent	Quantity	Designation
2	1	spider [1]
3Na	2	driving flange N
4N	2	coupling flange N
5	5 [2]	elements DZ [1]
6	see table 3 [3]	capscrews DIN EN ISO 4762 - 12.9
7	2	setscrew DIN EN ISO 4029

1) optionally spider or DZ elements
2) with size 180 quantity = 6
3) each coupling half

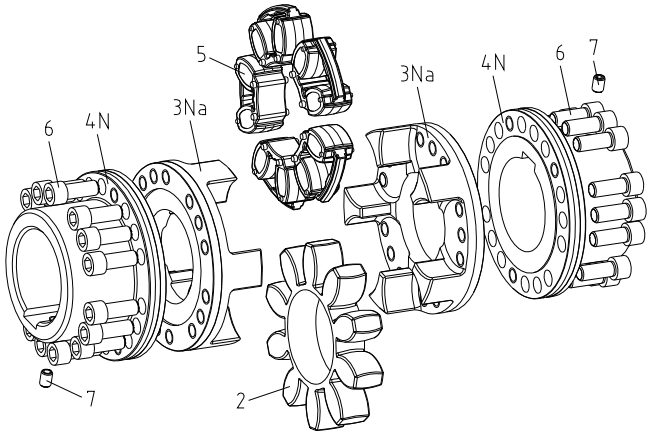

picture 7: ROTEX® type AFN

Components of ROTEX® type BFN

Compo-nent	Quantity	Designation
1	1	hub
2	1	spider [1]
3Na	1	driving flange N
4N	1	coupling flange N
5	5 [2]	elements DZ [1]
6	see table 3	capscrews DIN EN ISO 4762 - 12.9
7	2	setscrew DIN EN ISO 4029

1) optionally spider or DZ elements
2) with size 180 quantity = 6

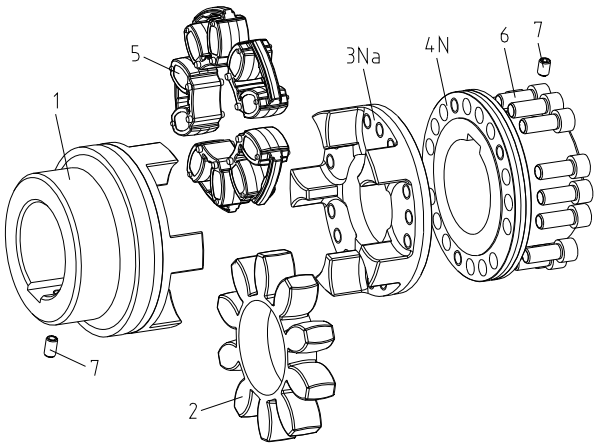

picture 8: ROTEX® type BFN

Components of ROTEX® type CF

Compo-nent	Quantity	Designation
1	1	hub
2	1	spider [1]
3b	1	driving flange type B
5	5 [2]	elements DZ [1]
7	1	setscrew DIN EN ISO 4029

1) optionally spider or DZ elements
2) with size 180 quantity = 6

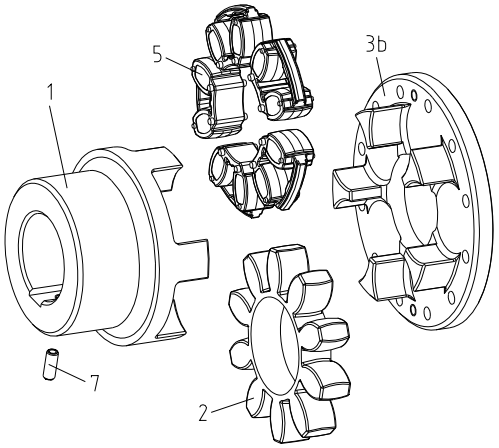

picture 9: ROTEX® type CF

4 Assembly

4.1 Components of Couplings

Components of ROTEX® type CFN

Compo-nent	Quantity	Designation
1	1	hub
2	1	spider [1]
3Na	1	driving flange N
5	5 [2]	elements DZ [1]
7	1	setscrew DIN EN ISO 4029

1) optionally spider or DZ elements
2) with size 180 quantity = 6

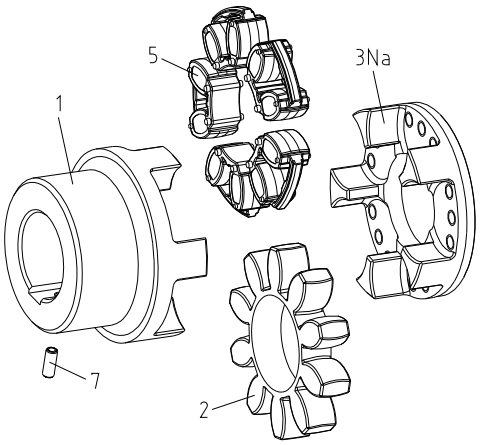

picture 10: ROTEX® type CFN

Components of ROTEX® type DF

Compo-nent	Quantity	Designation
2	1	spider [1]
3b	2	driving flange type B
5	5 [2]	elements DZ [1]

1) optionally spider or DZ elements
2) with size 180 quantity = 6

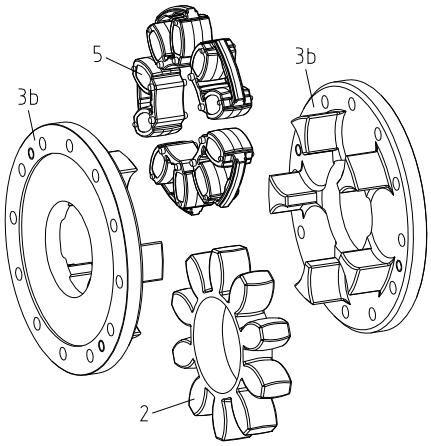

picture 11: ROTEX® type DF

Components of ROTEX® type DFN

Compo-nent	Quantity	Designation
2	1	spider [1]
3Na	2	driving flange N
5	5 [2]	elements DZ [1]

1) optionally spider or DZ elements
2) with size 180 quantity = 6

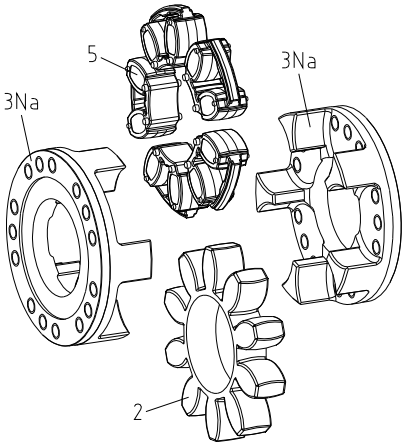

picture 12: ROTEX® type DFN

Features of the standard spiders

spider hardness (Shore)	Marking (colour)
92 Sh A	yellow
95/98 Sh A	red
64 Sh D-F	natural white with green marking of teeth

4 Assembly

4.2 Hint Regarding the Finish Bore

D A N G E R !
The maximum permissible bore diameters d (see table 1 to 3 in chapter 1 - Technical Data) must not be exceeded. If these figures are disregarded, the coupling may tear. Rotating particles may cause serious danger.

- Hub bores machined by the customer have to observe concentric running or axial running, respectively (see picture 13).
- Please make absolutely sure to observe the figures for d_{max}.
- Carefully align the hubs when the finish bores are brought in.
- Please use a setscrew according to DIN EN ISO 4029 with a cup point or an end plate to fasten the hubs axially.

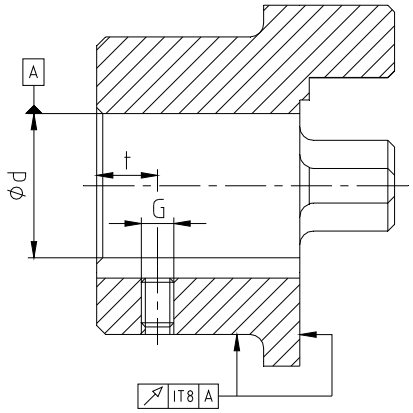

picture 13: concentric running and axial running

C A U T I O N !
The orderer is responsible for all subsequently made machinings to unbored or pilot bored and to finish machined coupling parts and spare parts. KTR does not assume any warranty claims resulting from insufficient refinish.

P R E C A U T I O N !
Any mechanical rework to couplings that are used in hazardous areas require an explicit release by KTR.
The orderer must send a drawing to KTR acc. to which the manufacture must be made. KTR checks this drawing and returns it to the orderer with approval.
KTR supplies unbored or pilot bored coupling parts and spare parts on explicit customer´s request. These parts are additionally labelled with the symbol Ⓤ.

Table 4: setscrews DIN EN ISO 4029

size	24	28	38	42	48	55	65	75	90	100	110	125	140	160	180
dimension G	M5	M8	M8	M8	M8	M10	M10	M10	M12	M12	M16	M16	M20	M20	M20
dimension t	10	15	15	20	20	20	20	25	30	30	35	40	45	50	50
tightening torque T_A [Nm]	2	10	10	10	10	17	17	17	40	40	80	80	140	140	140

4.3 Assembly of the Coupling (General)

A T T E N T I O N !
We recommend to check bores, shaft, keyway and feather key for dimensional accuracy before assembly.

Heating the hubs or coupling flanges slightly (approx. 80 °C) allows for an easier installation onto the shaft.

P R E C A U T I O N !
Please pay attention to the danger of ignition in hazardous areas.

D A N G E R !
Touching the heated hubs or coupling flanges causes burns.
We would recommend to wear safety gloves.

4 Assembly

4.3 Assembly of the Coupling (General)

C A U T I O N !
For the assembly please make sure that the distance dimension E (see table 1) is kept to ensure that the spider or elements DZ can be moved axially.
Disregarding this hint may cause damage on the coupling.

4.4 Assembly of the Type AFN

- Assemble the coupling flanges onto the shaft of driving and driven side (see picture 14).
- The insides of the coupling flanges must be flush with the faces of the shafts.
- Move the power packs in axial direction until the dimension E_1 is achieved.
- Secure the coupling flanges by fastening the setscrews DIN EN ISO 4029 with cup point or by an end plate.

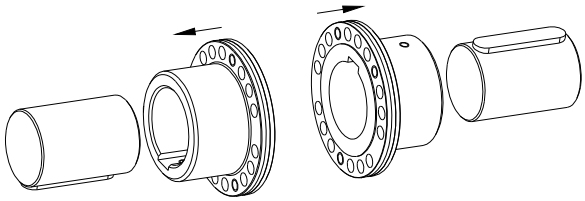

picture 14: assembly of coupling flanges

- Please plug the driving flanges and the spider or elements DZ together (see picture 15).

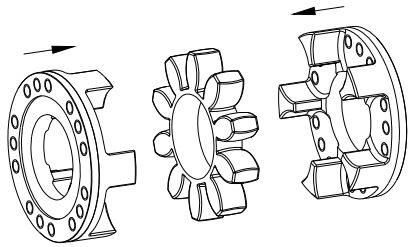

picture 15: assembly of driving flanges and spider

- Put the assembled parts between the coupling flanges (see picture 16).
- At first hand-screw the parts.
- Tighten the screws with a suitable torque key to the tightening torques T_A shown in table 3.
- Center the spider or elements DZ between the driving flanges and inspect the dimensions E and s (see picture 1).

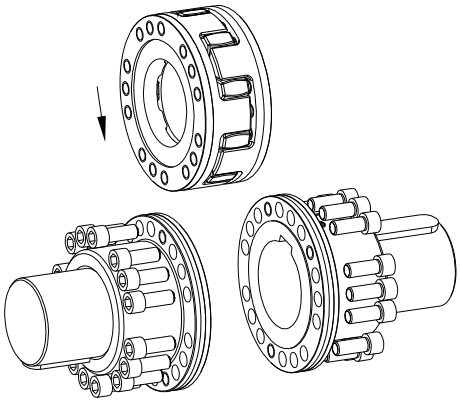

picture 16

C A U T I O N !
Having set the coupling into operation, the tightening torque of the screws and wear of spider have to be inspected in usual maintenance intervals.

4 Assembly

4.5 Assembly of the Type BFN

- Assemble the coupling flange onto the shaft of the driving side and the hub onto the shaft of the driven side (see picture 17).
- The inside of the parts have to be flush with the faces of the shafts.
- Secure the hub and the coupling flange by fastening the setscrews DIN EN ISO 4029 with cup point or by an end plate.
- Position the driving flange in front of the coupling flange (see picture 18).
- At first hand-screw the parts.
- Tighten the screws with a suitable torque key to the tightening torques T_A shown in table 3.
- Install the spider or elements DZ inside the cams of the hub (see picture 18).

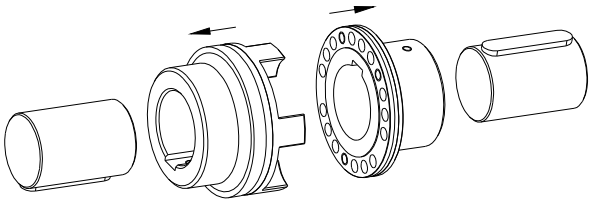

picture 17: assembly of the hub or coupling flange

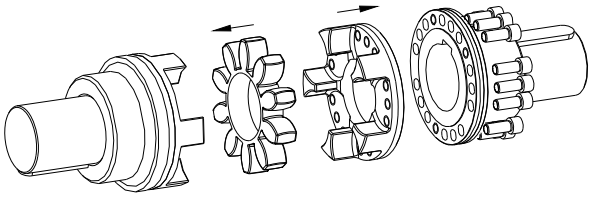

picture 18: assembly of the spider and driving flange

- Push the machines to be connected together.
- Center the spider or elements DZ and inspect the dimensions E and s (see picture 2).

C A U T I O N !
Having set the coupling into operation, the tightening torque of the screws and wear of spider have to be inspected in usual maintenance intervals.

4.6 Assembly of the Type CF and CFN

- Assemble the hub onto the shaft (see picture 19 type CF and picture 20 type CFN).
- The insides of the hub must be flush with the face of the shaft.
- Secure the hub by fastening the setscrew DIN EN ISO 4029 with cup point or by an end plate.
- Put the driving flange in front of the flange of the drive- or driven side shaft (see picture 19 type CF and picture 20 type CFN).
- At first hand-screw the parts.
- Tighten the screws with a suitable torque key to the tightening torques T_A shown in table 3.

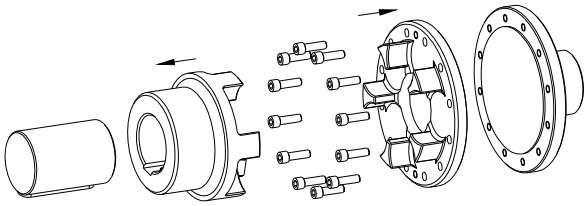

picture 19: assembly of hub or driving flange (type CF)

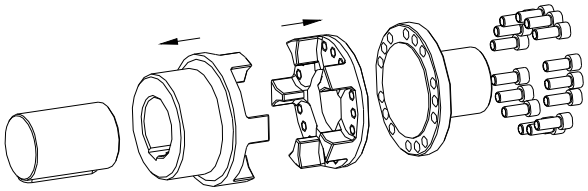

picture 20: assembly of hub or driving flange (type CFN)

4 Assembly

4.6 Assembly of the Type CF and CFN

- Install the spider or elements DZ inside the cams of the hub (see picture 21).
- Push the machines to be connected together.
- Center the spider or elements DZ and inspect the dimensions E and s (see picture 3 type CF and picture 4 type CFN).

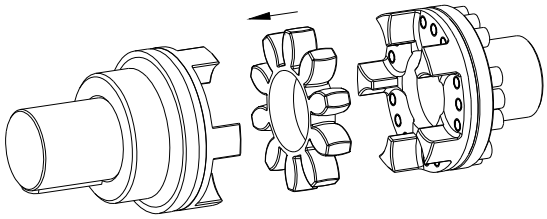

picture 21: assembly of the spider

C A U T I O N !
Having set the coupling into operation, the tightening torque of the screws and wear of spider have to be inspected in usual maintenance intervals.

4.7 Assembly of the Type DF and DFN

- Put the driving flanges in front of the flanges of the drive- and driven side (see picture 22 type DF and picture 23 type DFN).
- At first hand-screw the parts.
- Tighten the screws with a suitable torque key to the tightening torques T_A shown in table 3.

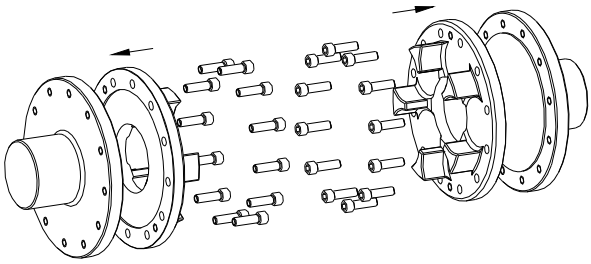

picture 22: assembly of the driving flanges (type DF)

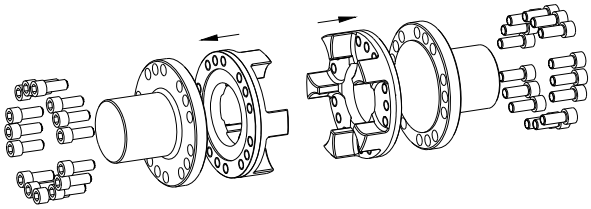

picture 23: assembly of the driving flanges (type DFN)

- Install the spider or elements DZ inside the cam section of the drive- or driven sided driving flange (see picture 24).
- Push the machines to be connected together.
- Center the spider or elements DZ and inspect the dimensions E and s (see picture 5 type DF and picture 6 type DFN).

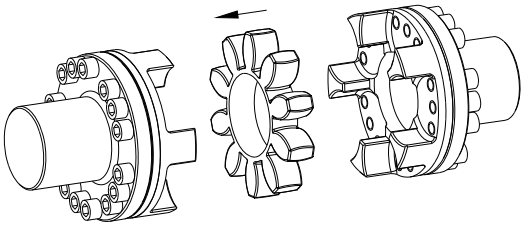

picture 24: assembly of the spider

C A U T I O N !
Having set the coupling into operation, the tightening torque of the screws and wear of spider have to be inspected in usual maintenance intervals.

4 Assembly

4.8 Displacements - Alignment of the Couplings

The displacement figures shown in table 5 offer sufficient safety to compensate for environmental influences like, for example, heat expansion or lowering of foundation.

C A U T I O N !
In order to ensure a long lifetime of the coupling and to avoid dangers regarding the use in hazardous areas, the shaft ends must be accurately aligned.
Please absolutely observe the displacement figures indicated (see table 5). If the figures are exceeded, the coupling is damaged.
The exacter the alignment of the coupling, the higher is its lifetime.
In case of a use in hazardous areas for the explosion group IIC (marking II 2GD c IIC T X), only the half displacement figures (see table 5) are permissible.

Please note:

- The displacement figures mentioned in table 5 are maximum figures which must not arise in parallel. If radial and angular displacement arises at the same time, the permissible displacement values may only be used in part (see picture 26).
- Please check with a dial gauge, ruler or feeler whether the permissible displacement figures of table 5 can be observed.

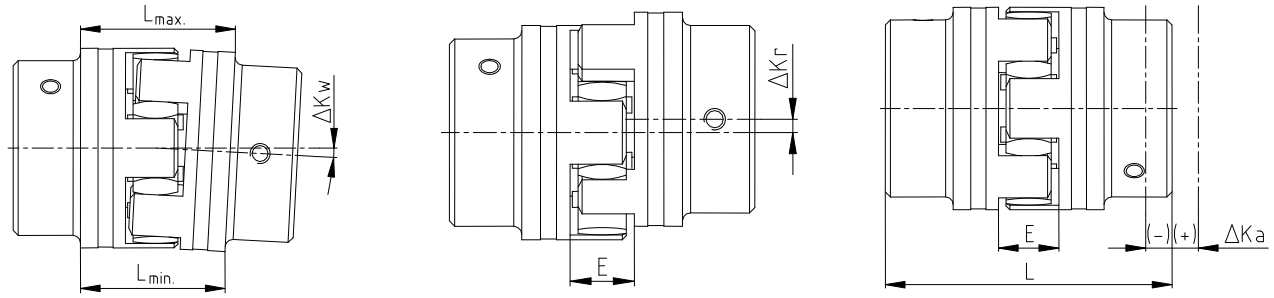

angular displacements — radial displacements — axial displacements

$\Delta K_w = L_{1max.} - L_{1min.}$ [mm]

$L_{max} = L + \Delta K_a$ [mm]

picture 25: displacements

Example for the misalignment combinations given in picture 26:

Example 1:
$\Delta K_r = 30$ %
$\Delta K_w = 70$ %

Example 2:
$\Delta K_r = 60$ %
$\Delta K_w = 40$ %

$\Delta K_{total} = \Delta K_r + \Delta K_w \leq 100$ %

picture 26: combinations of displacement

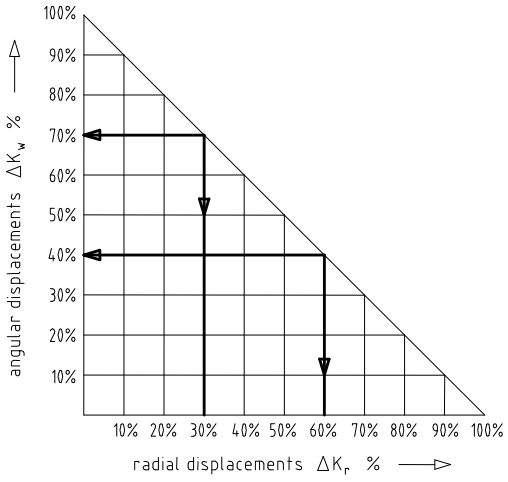

4 Assembly

4.8 Displacements - Alignment of the Couplings

Table 5: displacement figures

ROTEX® size		24	28	38	42	48	55	65	75	90	100	110	125	140	160	180
max. axial displacement ΔKa [mm]		-0,5	-0,7	-0,7	-1,0	-1,0	-1,0	-1,0	-1,5	-1,5	-1,5	-2,0	-2,0	-2,0	-2,5	-3,0
		+1,4	+1,5	+1,8	+2,0	+2,1	+2,2	+2,6	+3,0	+3,4	+3,8	+4,2	+4,6	+5,0	+5,7	+6,4
max. radial displacement ΔKr [mm] with	1500 rpm	0,22	0,25	0,28	0,32	0,36	0,38	0,42	0,48	0,50	0,52	0,55	0,60	0,62	0,64	0,68
	3000 rpm	0,15	0,17	0,19	0,21	0,25	0,26	0,28	0,32	0,34	0,36	0,38	-	-	-	-
ΔKw [degree] max. angular displacement with n = 1500 rpm ΔKw [mm]		0,9	0,9	1,0	1,0	1,1	1,1	1,2	1,2	1,2	1,2	1,3	1,3	1,2	1,2	1,2
		0,85	1,05	1,35	1,70	2,00	2,30	2,70	3,30	4,30	4,80	5,60	6,50	6,60	7,60	9,00
ΔKw [degree] max. angular displacement with n = 3000 rpm ΔKw [mm]		0,8	0,8	0,8	0,8	0,9	1,0	1,0	1,0	1,1	1,1	1,1	-	-	-	-
		0,75	0,84	1,10	1,40	1,60	2,00	2,30	2,90	3,80	4,20	5,00	-	-	-	-

4.9 Spares Inventory, Customer Service Addresses

A basic requirement to guarantee the operational readiness of the coupling is a stock of the most important spare parts on site.

Contact addresses of the KTR partners for spare parts and orders can be obtained from the KTR homepage under www.ktr.com.

5 Enclosure A

Hints and Instructions Regarding the Use in Ex Hazardous Areas

Type AFN:	coupling flange/driving flange/spider/driving flange/coupling flange
Type BFN:	hub/spider/driving flange/coupling flange
Type CF and CFN:	hub/spider/driving flange
Type DF and DFN:	driving flange/spider/driving flange

5.1 Use in Ex Hazardous Areas According to the Regulations

Conditions of operation in Ex hazardous locations

ROTEX® couplings are suitable for the use according to EC standard 94/9/EC.

1. Industry (with the exception of mining)

- device class II of category 2 and 3 (*coupling is not approved for device class 1*)
- media class G (*gases, fogs, steams*), zone 1 and 2 (*coupling is not approved for zone 0*)
- media class D (*dusts*), zone 21 and 22 (*coupling is not approved for zone 20)*
- explosion class IIC (*explosion class IIA and IIB are included in IIC*)

Temperature class:

Temperature class	ambient or operating temperature T_a	max. surface temperature
T4, T3, T2, T1	- 30 °C to + 90 °C [1)]	110 °C [2)]
T5	- 30 °C to + 80 °C	100 °C
T6	- 30 °C to + 65 °C	85 °C

Explanation:
The maximum surface temperatures result from each the maximum permissible ambient or operating temperature T_a plus the maximum temperature increase ΔT of 20 K which has to be taken into account.

1) The ambient or operating temperature T_a is limited to + 90 °C due to the permissible permanent operating temperature of the elastomers used.
2) The maximum surface temperature of 110 °C applies for the use in locations which are potentially subject to dust explosion, too.

2. Mining

Device class I of category M2 (coupling is not approved for device category M1).
Permissible ambient temperature - 30 °C to + 90 °C.

5 Enclosure A

Hints and Instructions Regarding the Use in Ex Hazardous Areas

5.2 Control Intervals for Couplings in Ex Hazardous Areas

explosion group	control intervals
3G 3D	For couplings which are classified in category 3G or 3D the operating and assembly instructions that are usual for standard operation apply. During the standard operation which has to be subject to the analysis of danger of ignition the couplings are free from any ignition source. Merely the temperature increase produced by proper heating and depending on the coupling type has to be considered: for ROTEX®: ΔT = 20 K
II 2GD c IIB T4, T5, T6	A checking of the circumferential backlash and a visual check of the flexible spider/ elements DZ must be effected after 3,000 operating hours for the first time, after 6 months at the latest. Except for centered, stiff connecting flanges (e. g. bellhousings). If you note an unconsiderable or no wear at the spider/elements DZ after this first inspection, the further inspections can be effected, in case of the same operating parameters, respectively after 6,000 operating hours or after 18 months at the latest. If you note a considerable wear during the first inspection, so that a change of the spider/ elements DZ would be recommended, please find out the cause according to the table „Breakdowns“, as far as possible. The maintenance intervals must be adjusted according to the changed operating parameters.
II 2GD c IIC T4, T5, T6	A checking of the circumferential backlash and a visual check of the flexible spider/ elements DZ must be effected after 2,000 operating hours for the first time, after 3 months at the latest. Except for centered, stiff connecting flanges (e. g. bellhousings). If you note an unconsiderable or no wear at the spider/elements DZ after this first inspection, the further inspections can be effected, in case of the same operating parameters, respectively after 4,000 operating hours or after 12 months at the latest. If you note a considerable wear during the first inspection, so that a change of the spider/ elements DZ would be recommended, please find out the cause according to the table „Breakdowns“, as far as possible. The maintenance intervals must be adjusted according to the changed operating parameters.

ROTEX® coupling

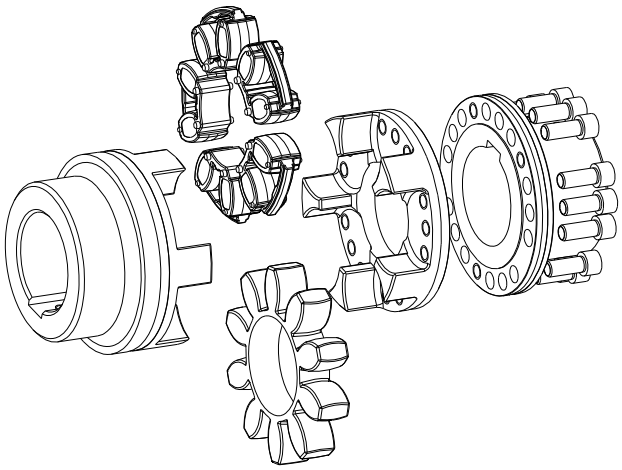

picture 27: ROTEX® coupling (expample: type BFN)

picture 28.1: ROTEX® elements DZ

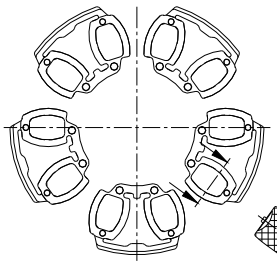

picture 28.2: ROTEX® spider

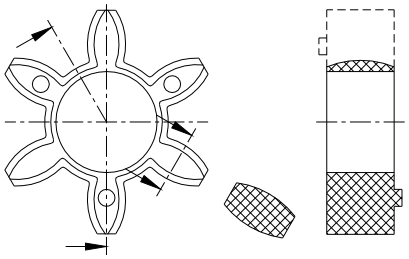

Here the backlash between coupling cams and the flexible spider/element DZ must be checked by a feeler gauge.
When reaching the limit of wear of max. friction, the spider/element DZ must be exchanged immediately, independent of the inspection intervals.

5 Enclosure A

Hints and Instructions Regarding the Use in Ex Hazardous Areas

5.3 Approximate Values of Wear

In case of a backlash of more than X mm, the flexible spider/elements DZ must be exchanged.

The reaching of the exchange values depends on the operating conditions and the existing operating parameters.

C A U T I O N !
In order to ensure a long lifetime of the coupling and to avoid dangers regarding the use in hazardous areas, the shaft ends must be accurately aligned.
Please absolutely observe the displacement figures indicated (see table 5). If the figures are exceeded, the coupling is damaged.

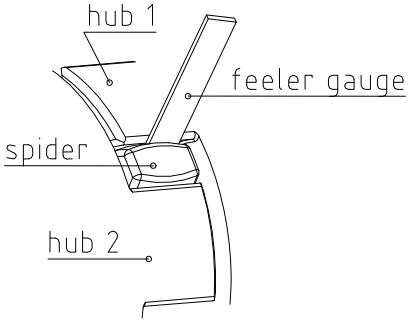

picture 29: checking of the limit of wear

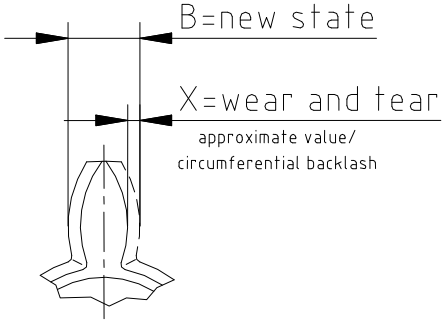

picture 30: wear of spider

Table 6:

ROTEX® size	limits of wear (friction) $X_{max.}$ [mm]	ROTEX® size	limits of wear (friction) $X_{max.}$ [mm]
9	2	65	5
14	2	75	6
19	3	90	8
24	3	100	9
28	3	110	9
38	3	125	10
42	4	140	12
48	4	160	14
55	5	180	14

5.4 Permissible Coupling Materials in the Ex Hazardous Area

In the Explosion Groups **IIA, IIB** and **IIC** the following materials may be combined:

EN-GJL-250 (GG 25)
EN-GJS-400-15 (GGG 40)
steel
stainless steel

Semifinished products from aluminium with a magnesium part of up to 7,5 % and a yield point of $R_{p0,2} \geq 250$ N/mm^2 are permitted for the use in hazardous areas.
Aluminium diecast is generally excluded for hazardous areas.

5 Enclosure A

Hints and Instructions Regarding the Use in Ex Hazardous Areas

5.5 Ex Marking of Coupling for the Hazardous Area

Couplings for the use in hazardous areas are marked on at least one component completely and on the remaining components at the outside diameter of the hub or on the front side with an Ex label for the respectively permitted conditions of use. The flexible spider or elements DZ is excluded.
For reason of the limited space only the symbol Ex is stamped up to size 19.

Complete labelling: Ex II 2G c IIC T6, T5 bzw. T4 - 30 °C ≤ T_a ≤ + 65°C, + 80 °C bzw. +90 °C
II 2D c T 110 °C/I M2 c - 30 °C ≤ T_a ≤ + 90 °C

Short labelling: Ex II 2GD c IIC T X/I M2 c X

The former marking remains valid: Ex II 2G c IIC T4/T5/T6 - 30 °C ≤ T_a ≤ + 80/60/45 °C
II 2D c T 110 °C/I M2 c - 30 °C ≤ T_a ≤ + 80 °C

The labelling with Explosion Group IIC includes the Explosion Groups IIA and IIB.

If the coupling part is labelled with U in addition to Ex, KTR supplied it unbored or pilot bored.

C A U T I O N !
Any mechanical rework to couplings that are used in hazardous areas require an explicit release by KTR.
The orderer must send a drawing to KTR acc. to which the manufacture must be made. KTR checks this drawing and returns it to the orderer with approval.

5.6 Starting

Before putting the coupling into operation, check the tightness of the setscrews in the hubs, the alignment and the distance dimension E and correct, if necessary, and also check all screw connections regarding the stipulated tightening torques dependent on the type of coupling.

Ex If used in hazardous areas the grub screws to fix the hub as well as all screw connections must be additionally secured against self-loosening, e. g. glue with Loctite (medium strength).

Last but not least, the coupling protection against unintended contact must be fixed.

The cover must be electrically conductive and be included in the equipotential bonding. Bellhousings (magnesium part below 7,5 %) made from aluminium and damping rings (NBR) can be used as connecting element between pump and electro motor. The cover may only be taken off after having stopped the unit.

During operation, please pay attention to

- strange running noises
- occurring vibrations.

If the couplings are used in dust explosive areas and in mining the user must make sure that there is no accumulation of dust in a critical quantity between the cover and the coupling. The coupling must no operate in an accumulation of dust.

5 Enclosure A

Hints and Instructions Regarding the Use in Ex Hazardous Areas

5.6 Starting

For covers with unlocked openings on the upper side no light metals may be used if the couplings are used as appliances of appliance group II (*if possible, from stainless steel*).
If the couplings are used in mining (appliance group I M2), the cover must not be made from light metal. In addition, it must be resistant to higher mechanical loads than if it is used as appliance of appliance group II.

The minimum distance of the protection device to the rotating parts must be at least 5mm.

If the protection device is used as cover, regular openings complying with the explosion protection demands can be made that must not exceed the following dimensions:

	form of the openings		
	circular openings diameter in mm	rectangular openings side length in mm	straight or bended slot distance of the side limit in mm
top surface of the covering	4	4	prohibited
side parts of the covering	8	8	8

C A U T I O N !
If you note any irregularities at the coupling during operation, the drive unit must be turned off immediately. The cause of the breakdown must be found out with the table „Breakdowns“ and, if possible, be eliminated according to the proposals. The possible breakdowns mentioned can be hints only. To find out the cause all operating factors and machine components must be considered.

Coupling layer:

If coated (priming, painting etc.) couplings are used in hazardous areas, the requirements to conductability and layer thickness must be considered. In case of paintings up to 200 µm no electrostatic load can be expected. Multiple coatings that are thicker than 200 µm are prohibited for explosion group IIC.

5.7 Breakdowns, Causes and Elimination

The below-mentioned errors can lead to an incorrect use of the **ROTEX®** coupling. In addition to the stipulations in these operating and mounting instructions please make sure to avoid these errors.
The errors listed can only be clues to search for the errors. When searching for the error the adjacent components must be generally included.

Due to incorrect use the coupling can become a source of ignition.
EC Standard 94/9/EC requires a special care from the manufacturer and the user.

General errors incorrect use

- Important data for the coupling selection was not forwarded.
- The calculation of the shaft/hub connection was not considered.
- Coupling parts with damage occurred during transport are assembled.
- If the heated hubs are assembled, the permissible temperature is exceeded.
- The fits of the parts to be assembled are not coordinated with each other.
- Tightening torques are below/exceeded.
- Components are exchanged by mistake/put together incorrectly.
- A wrong or no spider/elements DZ is inserted into the coupling.

5 Enclosure A

Hints and Instructions Regarding the Use in Ex Hazardous Areas

5.7 Breakdowns, Causes and Elimination

Continuation:

- No original KTR parts (purchased parts) are used.
- Old/already worn out spiders/elements DZ or spiders/elements DZ stored too long are used.
- The coupling used/the coupling protection used is not suitable for the operation in hazardous areas and does not correspond to EC Standard 94/9/EC, respectively.
- Maintenance intervals are not observed.

breakdowns	causes	danger hints for hazardous areas	elimination
change of the running noises and/or occurring vibrations	misalignment	increased temperature the the spider surface; danger of ignition by hot surfaces	1) put the unit out of operation 2) eliminate the reason for the misalignment (e. g. loose foundation bolts, break of the engine fixing, heat expansion of unit components, change of the assembly dimension E of the coupling) 3) checking of wear see under point Control
	wear of spider, short-term torque transmission due to metal contact	danger of ignition due to sparking	1) put the unit out of operation 2) disassemble the coupling and remove rests of the spider 3) check coupling parts and exchange damaged coupling parts 4) insert spider, assemble coupling parts 5) check alignment, correct if necessary
	loose screws for axial securement of hubs	danger of ignition due to hot surfaces and sparking	1) put the unit out of operation 2) check alignment of coupling 3) tighten the screws to secure the hubs and secure against self-loosening 4) checking of wear see under point Control
break of cam	wear of spider, torque transmission due to metal contact	danger of ignition due to sparking	1) put the unit out of operation 2) change complete coupling 3) check alignment
	break of the cams due to high shock energy/overload	danger of ignition due to sparking	1) put the unit out of operation 2) change complete coupling 3) check alignment 4) find out the reason of overload
	operating parameters do not correspond to the performance of the coupling	danger of ignition due to sparking	1) put the unit out of operation 2) check the operating parameters and select a larger coupling (consider installation space) 3) assemble new coupling size 4) check alignment
	mistake in service of the unit	danger of ignition due to sparking	1) put the unit out of operation 2) change complete coupling 3) check alignment 4) instruct and train the service staff

5 Enclosure A

Hints and Instructions Regarding the Use in Ex Hazardous Areas

5.7 Breakdowns, Causes and Elimination

breakdowns	causes	danger hints for hazardous areas	elimination
premature wear of spider	misalignment	increased temperature the the spider surface; danger of ignition by hot surfaces	1) put the unit out of operation 2) eliminate the reason for the misalignment (e. g. loose foundation bolts, break of the engine fixing, heat expansion of unit components, change of the assembly dimension E of the coupling) 3) checking of wear see under point Control
	e. g. contact with aggressive liquids/ oils, ozone-influence, too high/low ambient temperatures etc. effecting a physical change of the spider	danger of ignition due to sparking in case of metallic contact of the cams	1) put the unit out of operation 2) disassemble the coupling and remove rests of the spider 3) check coupling parts and exchange damaged coupling parts 4) insert spider, assemble coupling parts 5) check alignment, correct if necessary 6) make sure that further physical changes of the spider are excluded
	ambient/contact temperatures which are too high for the spider, max. permissible e. g. T4 = - 30 °C/+ 90 °C	danger of ignition due to sparking in case of metallic contact of the cams	1) put the unit out of operation 2) disassemble the coupling and remove rests of the spider 3) check coupling parts and exchange damaged coupling parts 4) insert spider, assemble coupling parts 5) check alignment, correct if necessary 6) check and regulate ambient/contact temperature (eventually even elimination by using other spider materials)
premature wear of spider (liquefaction of material inside the spider cam)	drive vibrations	danger of ignition due to sparking in case of metallic contact of the cams	1) put the unit out of operation 2) disassemble the coupling and remove rests of the spider 3) check coupling parts and exchange damaged coupling parts 4) insert spider, assemble coupling parts 5) check alignment, correct if necessary 6) find out the reason for the vibrations (eventually elimination by spider with lower or higher shore hardness)

Ex If you operate with a worn spider/elements DZ (see item 5.2) and the subsequent contact of metal parts a due operation meeting the explosion protection requirements and acc. to Standard 94/9/EC is not ensured.

☞ **A T T E N T I O N !**
KTR does not assume any liabilities or guarantees regarding the use of spare parts and accessories which are not provided by KTR and for the damages resulting herefrom.

5 Enclosure A

Hints and Instructions Regarding the Use in Ex Hazardous Areas

5.8 EC Certificate of Conformity

EC Certificate of Conformity

corresponding to EC Standard 94/9/EC dated 23 March 1994
and to the legal regulations

The manufacturer - KTR Kupplungstechnik GmbH, D-48432 Rheine - states that the

flexible ROTEX® couplings

described in these mounting instructions and explosion-proof designed correspond to Article 1 (3) b) of Standard 94/9/EC and comply with the general Safety and Health Requirements according to enclosure II of Standard 94/9/EC.

According to article 8 (1) of Standard 94/9/EC the technical documentation is deposited with the:

IBExU
Institut für Sicherheitstechnik GmbH
Fuchsmühlenweg 7

09599 Freiberg

Rheine,	04.02.10	i. V.	i. V.
	Date	Reinhard Wibbeling Engineering Manager	Michael Brüning Product Manager