REVOLEX® KX / KX-D
Type SB with brake disc

Flexible pin & bush couplings types KX and KX-D
and their combinations

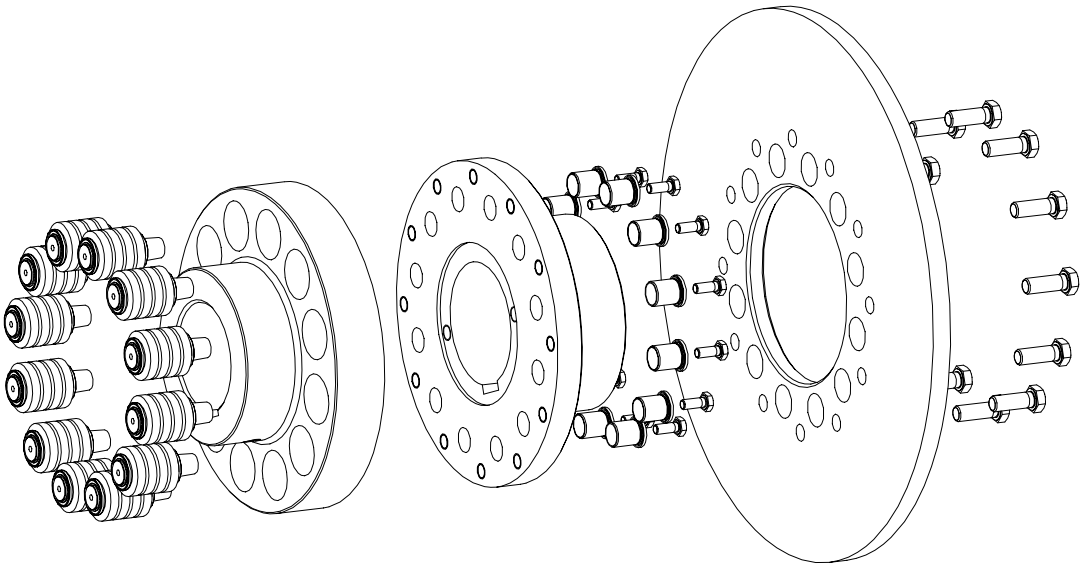

Type KX – SB
(taper pin design B)

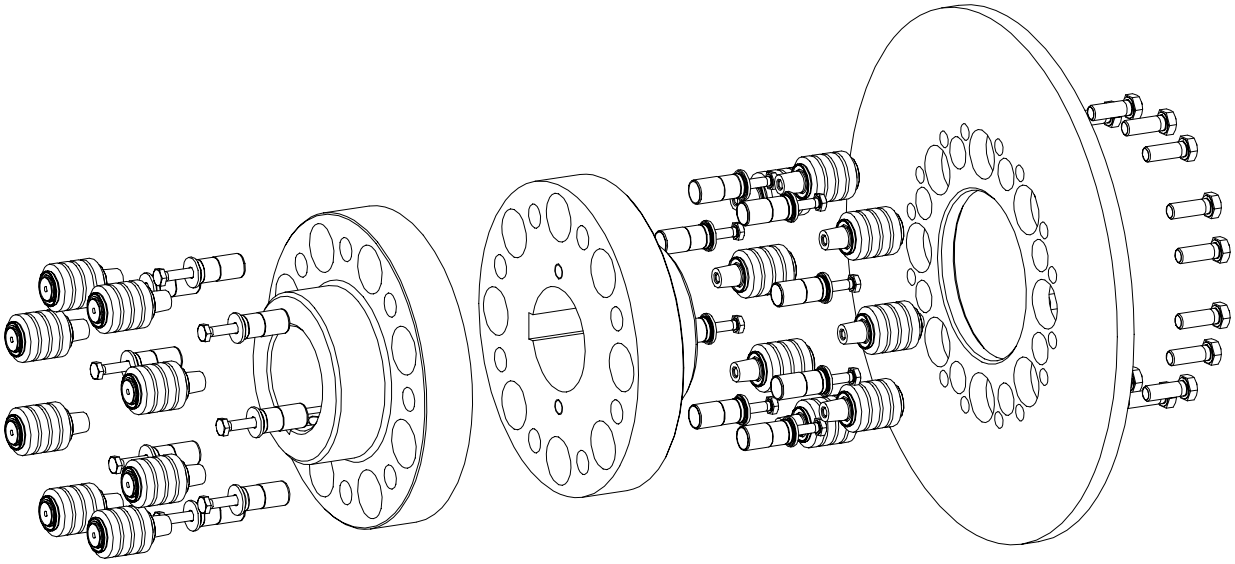

Type KX-D – SB
(taper pin design B)

REVOLEX® KX / KX-D is a torsionally flexible pin & bush coupling. It is able to compensate for shaft displacement caused by, as an example, inaccuracies in production, heat expansion, etc.

Table of Contents

1 Technical Data

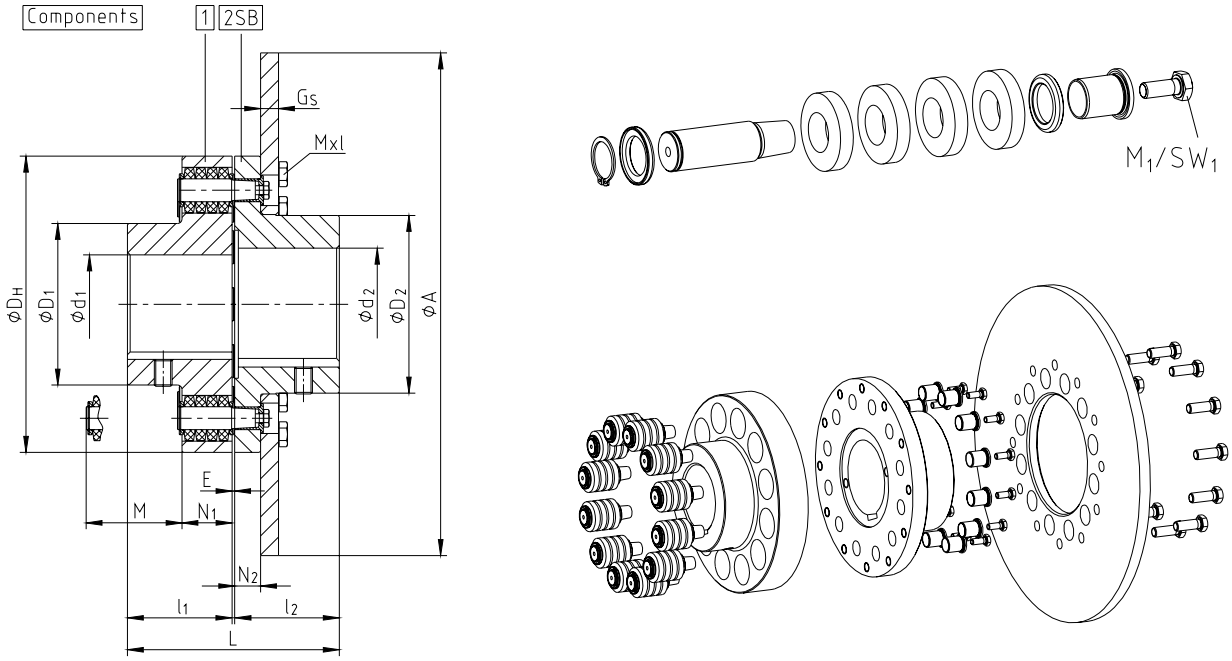

picture 1: REVOLEX®, type KX – SB (taper pin design B)

Table 1: Torques and dimensions – type KX – SB (taper pin design B)

REVOLEX® KX – SB															
Size	Torques [1] [Nm]		Finish bore max. [2] d_1/d_2		Dimensions [mm] General										
	T_{KN}	$T_{K\,max.}$	Cast iron	Steel	L	l_1; l_2	E	D_H	D_1	D_2	N_1	N_2	M*	A	G_S
KX 105	6485	12970	110/125	120/135	237	117	3	330	180	198	56	29	76	Dimensions on request of the customer	Dimensions on request of the customer
KX 120	10080	21060	125/145	140/155	270	132	6	370	206	223	76	45	100		
KX 135	14030	28060	140/150	160/165	300	147	6	419	230	237	76	45	100		
KX 150	17960	35920	160	185	336	165	6	457	256	257	76	45	100		
KX 170	26360	52720	180	220	382	188	6	533	292	289	92	62	130		
KX 190	36160	72320	205	245	428	211	6	597	330	327	92	62	130		
KX 215	48160	96320	230	275	480	237	6	660	368	365	92	62	145		
KX 240	65740	131480	250	310	534	264	6	737	407	400	122	75	167		

1) Standard material NBR (perbunan) 80 ± 5 Shore A * Drop-out center dimension

2) Bore H7 with feather keyway according to DIN 6885, sheet 1 [JS9] and thread for setscrews on the keyway (see table 9)

Maximum circumferential speed = 60 m/s referring to the maximum outside diameter (dimension A)

Table 2: Hexagon head screw DIN EN ISO 4017 - 10.9

Size	KX 105	KX 120	KX 135	KX 150	KX 170	KX 190	KX 215	KX 240
Dimension M x l [mm]	M16 x 45	M20 x 50	M20 x 50	M20 x 55	M20 x 55	M20 x 55	M20 x 55	M24 x 65
Number z	12	10	12	14	20	24	28	20
Tightening torque T_A [Nm]	295	580	580	580	580	580	580	1000

Table 3: Pin – type KX – SB (taper pin design B)

Size	KX 105	KX 120	KX 135	KX 150	KX 170	KX 190	KX 215	KX 240
Pin size	3	4			5			6
M_1 [mm]	M10	M12			M16			M24
SW_1 [mm]	16	18			24			36
Tightening torque T_A [Nm]	67	115			290			970

1 Technical Data

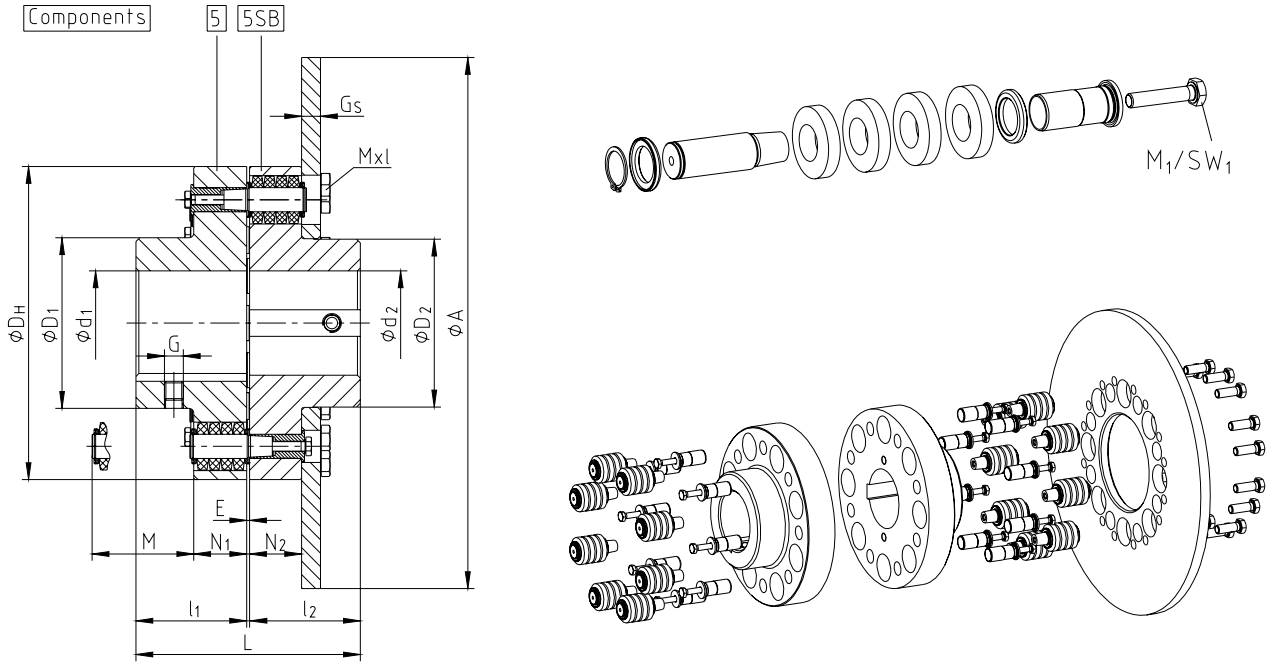

picture 2: REVOLEX®, type KX-D – SB (taper pin design B)

Table 4: Torques and dimensions – type KX-D – SB (taper pin design B)

REVOLEX® KX-D – SB															
Size	Torques [1] [Nm]		Finish bore max. [2] d_1/d_2		Dimensions [mm] General										
	T_{KN}	$T_{K\,max.}$	Cast iron	Steel	L	l_1; l_2	E	D_H	D_1	D_2	N_1	N_2	M*	A	G_S
KX-D 105	8650	17300	110	120	237	117	3	330	180	177	56	55	76	Dimensions on request of the customer	Dimensions on request of the customer
KX-D 120	14110	28220	125	140	270	132	6	370	206	203	76	75	100		
KX-D 135	18690	37380	140	160	300	147	6	419	230	227	76	75	100		
KX-D 150	23100	46200	160	185	336	165	6	457	256	253	76	75	100		
KX-D 170	36900	73800	180	220	382	188	6	533	292	289	92	91	130		
KX-D 190	48210	96420	205	245	428	211	6	597	330	327	92	91	130		
KX-D 215	61900	123800	230	275	480	237	6	660	368	365	92	91	145		
KX-D 240	920300	184060	250	310	534	264	6	737	407	404	122	121	167		

1) Standard material NBR (perbunan) 80 ± 5 Shore A

* Drop-out center dimension

2) Bore H7 with feather keyway according to DIN 6885, sheet 1 [JS9] and thread for setscrews on the keyway (see table 9)

Maximum circumferential speed = 60 m/s referring to the maximum outside diameter (dimension A)

Table 5: Hexagon head screw DIN EN ISO 4017 - 10.9

Size	KX-D 105	KX-D 120	KX-D 135	KX-D 150	KX-D 170	KX-D 190	KX-D 215	KX-D 240
Dimension M x l [mm]	M12 x 45	M16 x 50	M16 x 60	M16 x 60	M24 x 65	M24 x 65	M24 x 65	M30 x 70
Number z	16	14	16	18	14	16	18	14
Tightening torque T_A [Nm]	120	295	295	295	1000	1000	1000	2000

Table 6: Pin – type KX-D – SB (taper pin design B)

Size	KX-D 105	KX-D 120	KX-D 135	KX-D 150	KX-D 170	KX-D 190	KX-D 215	KX-D 240
Pin size	3	4			5			6
M_1 [mm]	M10	M12			M16			M24
SW_1 [mm]	16	18			24			36
Tightening torque T_A [Nm]	67	115			290			970

1 Technical Data

The rated torques apply under the following conditions:

- Use of original KTR components made of perbunan or natural rubber in 80 Shore
- Permanent operation
- Up to 25 torque shocks (up to 3 times the rated torque) per hour
- Adhering to the misalignment figures mentioned
- Operation within the permissible temperature range in consideration of service factors for temperature
  - - 30° C to + 80° C with elastomers made of perbunan (NBR)
  - - 50° C to + 70° C with elastomers made of natural rubber (NR)

2 Hints

2.1 Coupling Selection

C A U T I O N !
For a continuous and troublefree operation of the coupling it must be designed according to the selection instructions (according to DIN 740 part 2) for the particular application (see company catalogue).
We would recommend balancing from a circumferential speed of 30 m/s.
If the operating conditions (performance, speed, changes at engine and machine) change, the coupling selection must be checked again.
Please make sure that the technical data regarding torque only refers to the elastomers. The transmissible torque of the shaft/hub connection must be checked by the orderer, and he is responsible for the same.

For drives with endangered torsional vibration (drives with periodical load on torsional vibration) it is necessary to make a torsional vibration calculation to ensure a perfect selection. Typical drives with endangered torsional vibration are e. g. drives with diesel engines, piston pumps, piston compressors etc. On request KTR makes the coupling selection and the torsional vibration calculation.

2.2 General Hints

Please read through these mounting instructions carefully before you set the coupling into operation.
Please pay special attention to the safety instructions!
The mounting instructions are part of your product. Please keep them carefully and close to the coupling.

2.3 Safety and Advice Hints

STOP	**D A N G E R !**	**Danger of injury to persons**
!	**C A U T I O N !**	**Damages on the machine possible**
☞	**A T T E N T I O N !**	**Pointing to important items**

2 Hints

2.4 General Hints to Danger

D A N G E R !
With assembly, operation and maintenance of the coupling it has to be made sure that the entire drive train is protected against unintentional engagement. You can be seriously hurt by rotating parts. Please make absolutely sure to read through and observe the following safety instructions.

- All operations on and with the coupling have to be performed taking into account "safety first".
- Please make sure to disengage the power pack before you perform your work.
- Protect the power pack against unintentional engagement, e. g. by providing hints at the place of engagement or removing the fuse for current supply.
- Do not touch the operation area of the coupling as long as it is in operation.
- Please protect the coupling against unintentional touch. Please provide for the necessary protection devices and caps.

2.5 Proper Use

You may only assemble, operate and maintain the coupling if you

- have carefully read through the mounting instructions and understood them
- had technical training
- are authorized to do so by your company

The coupling may only be used in accordance with the technical data (see table 1 to 4 in chapter 1).
Unauthorized modifications on the coupling design are not admissible. We do not take any warranty for resulting damages. To further develop the product we reserve the right for technical modifications.
The **REVOLEX® KX / KX-D** described in here corresponds to the technical status at the time of printing of these mounting instructions.

3 Storage

The coupling hubs are supplied in preserved condition and can be stored at a dry and roofed place for 6 - 9 months.
The features of the elastomer ring remain unchanged for up to 5 years in case of favourable stock conditions.

C A U T I O N !
The storage rooms may not include any ozone-generating devices, like e. g. fluorescent light sources, mercury-vapour lamps or electrical high-voltage appliances.
Humid storage rooms are not suitable.
Please make sure that there is no condensation. The best relative air humidity is under 65%.

4 Assembly

The coupling is supplied in assemblies and individual parts. Before assembly the coupling has to be controlled for completeness.

4.1 Components of the Couplings

Components REVOLEX®, type KX – SB (taper pin design B)

Component	Quantity	Designation
1 [1)]	1	Hub part 1
2SB [1)]	1	FN hub part 2SB
3a	See Table 7	Complete pin KX (design B)
4	See Table 7	KX sleeve
8a	1	Brake disc
9	See Table 7	Hexagon head screw acc. to DIN EN ISO 4017
10 [2)]		Setscrew acc. to DIN EN ISO 4029

1) Material and balancing condition on request of the customer
2) Axial fastening of the hub and tolerances of the shaft-hub-connections on request of the customer

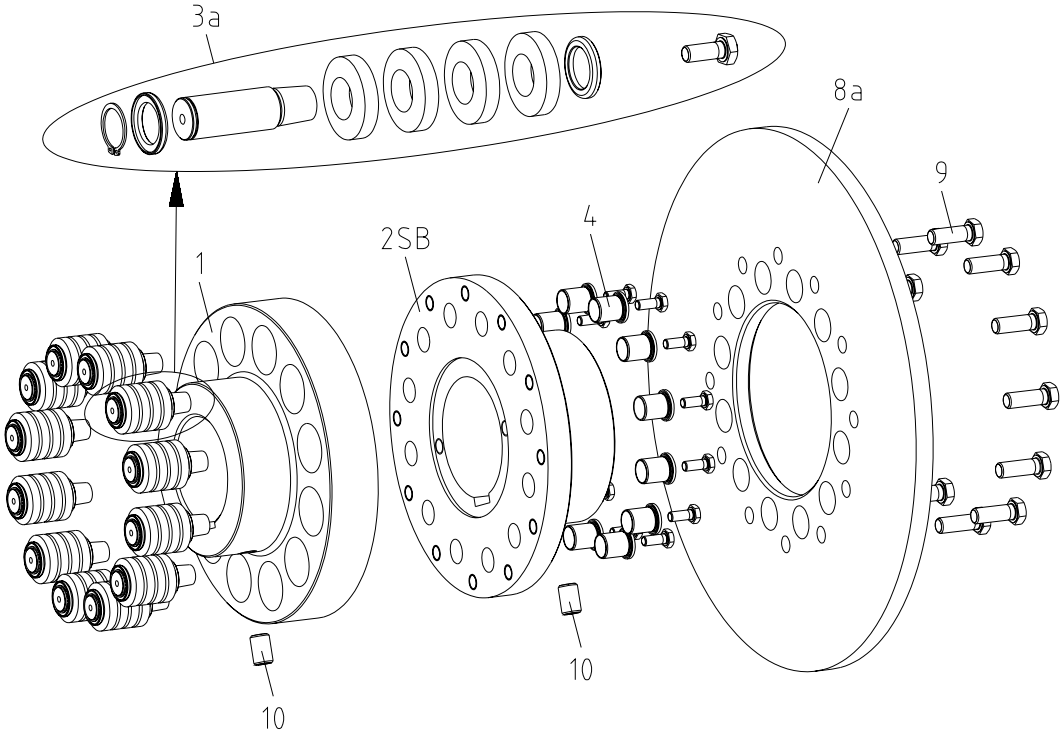

picture 3: REVOLEX®, type KX – SB (taper pin design B)

On request FN hub part 2SB and brake disc are delivered assembled with hexagon screws.

Table 7:

Number z of components	REVOLEX® Size							
	KX 105	KX 120	KX 135	KX 150	KX 170	KX 190	KX 215	KX 240
3a, 4	12	10	12	14	10	12	14	10
9	12	10	12	14	20	24	28	20

4 Assembly

4.1 Components of the Couplings

Components REVOLEX®, type KX-D – SB (taper pin design B)

Component	Quantity	Designation
5 1)	1	Hub part 5
5SB 1)	1	FN hub part 5SB
3c	See Table 8	Complete pin KX-D (design B)
6	See Table 8	KX-D sleeve
8b	1	Brake disc
9	See Table 8	Hexagon head screw acc. to DIN EN ISO 4017
10 2)		Setscrew acc. to DIN EN ISO 4029

1) Material and balancing condition on request of the customer
2) Axial fastening of the hub and tolerances of the shaft-hub-connections on request of the customer

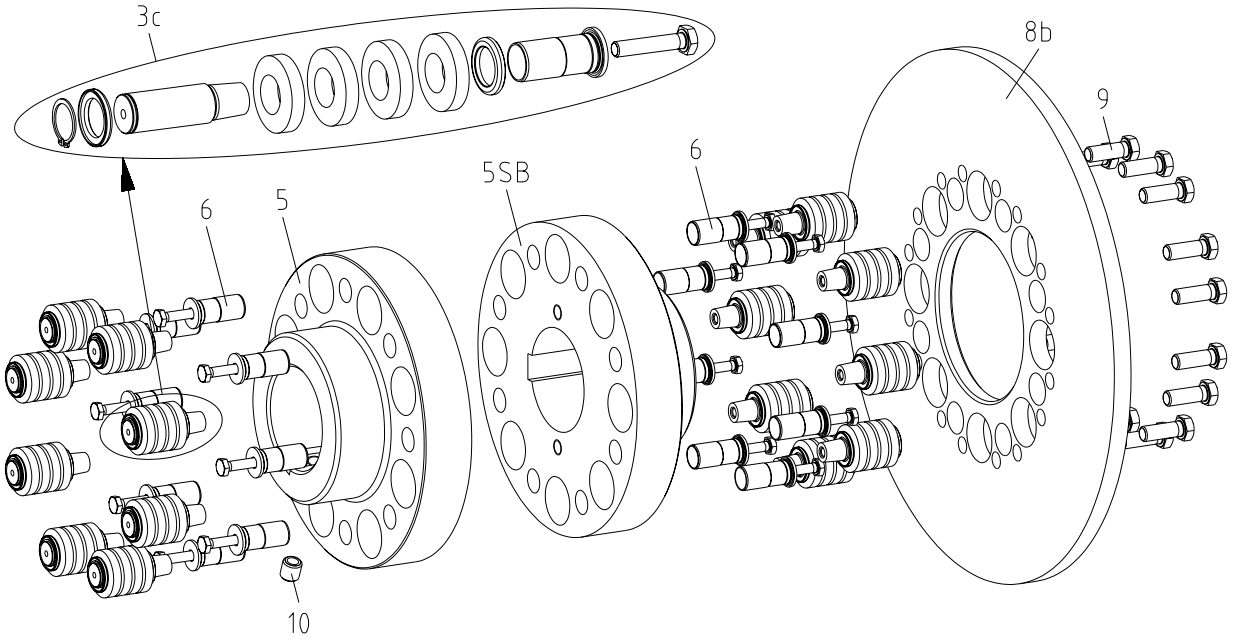

picture 4: REVOLEX®, type KX-D – SB (taper pin design B)

On request FN hub part 5SB and brake disc are delivered assembled with hexagon screws.

Table 8:

Number z of components	REVOLEX® Size							
	KX-D 105	KX-D 120	KX-D 135	KX-D 150	KX-D 170	KX-D 190	KX-D 215	KX-D 240
3c, 6, 9	16	14	16	18	14	16	18	14

4 Assembly

4.2 Components of the Pins

Components complete pin KX (design B) – component 3a

Component	Quantity	Designation
3.1b	1	Pin KX (design B)
3.2	4	Elastomer ring
3.3b	2	Disc
3.4a	1	Hexagon head screw acc. to DIN EN ISO 4017
3.5	1	Circlip DIN 471

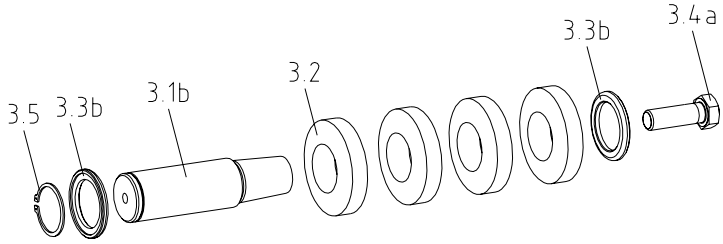

picture 5: Complete pin KX (design B)

Components complete pin KX-D (design B) – component 3c

Component	Quantity	Designation
3.1b	1	Pin KX-D (design B)
3.2	4	Elastomer ring
3.3b	2	Disc
3.4c	1	Hexagon head screw acc. to DIN EN ISO 4017
3.5	1	Circlip DIN 471

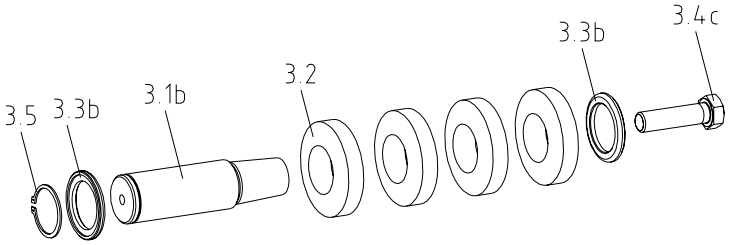

picture 6: Complete pin KX-D (design B)

4 Assembly

4.3 Assembly of the Coupling (General)

A T T E N T I O N !
We recommend to check bores, shaft, keyway and feather key for dimensional accuracy before assembly.

Heating the hubs slightly (approx. 80 °C) allows for an easier installation onto the shaft.

D A N G E R !
Touching the heated hubs causes burns.
We would recommend to wear safety gloves.

C A U T I O N !
For the assembly please make sure that the distance dimension E (see table 1 and 4) is adhered to make sure that the hubs do not touch while in operation.
Disregarding this hint may cause damage on the coupling.

C A U T I O N !
With the assembly of screw connections only those screws indicated by the manufacturer have to be used. When tightening the screws the torque indicated by the manufacturer has to be observed. The screws have to be secured against relieving (e. g. Loctite 243 medium-tight).

4.4 Assembly of the type KX – SB

Only for delivery of individual parts (FN hub and brake disc):

- Screw up the brake disc (component 8a) to the FN hub part 2SB (component 2SB) and tighten the hexagon head screws (component 9) evenly to the tightening torques mentioned in table 2 by means of a dynamometric screwdriver (see picture 7).

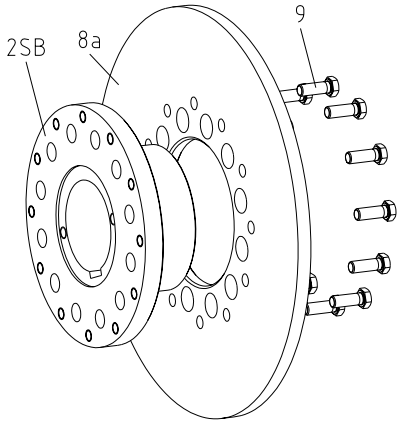

picture 7

- Drive the sleeves (component 4) into the bores of the FN hub part 2SB by light strokes (see picture 8).

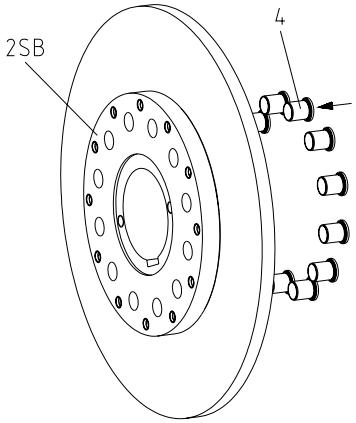

picture 8

4 Assembly

4.4 Assembly of the type KX – SB

- Please assemble the hubs onto the shafts of the drive and driven side in a way that the end faces of the coupling hubs are flush with the faces of the shafts (see picture 9).

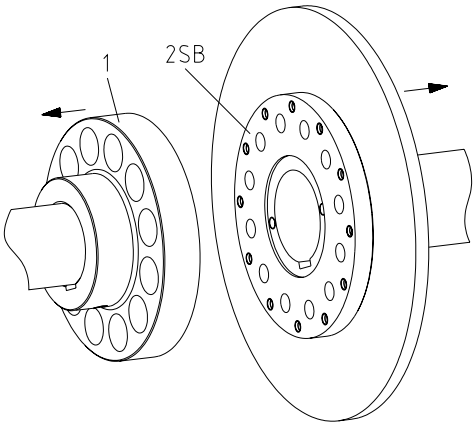

picture 9

- Move the power packs in axial direction until the dimension E is achieved (see picture 10).
- If the power packs are already firmly assembled, axial movement of the hubs on the shafts allows for adjusting the dimension E.
- Fasten the hubs by tightening the setscrews DIN EN ISO 4029 at the tightening torque acc. to table 9.
- Align the coupling hubs in a way that the bores for the pins are in alignment.

C A U T I O N !
Please consider permissible shaft displacements from chapter 4.7!

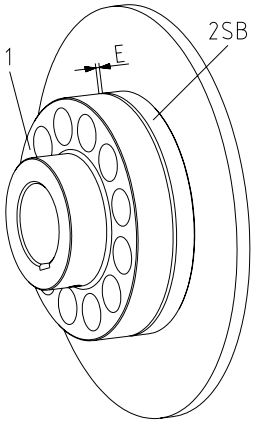

picture 10

- Insert the pins (component 3a) into the hub part 1 (component 1) (see picture 11).
- Screw up the pins to the hexagon head screws (component 3.4a) and tighten them evenly to the tightening torques mentioned in table 3 by means of a dynamometric screwdriver (see picture 11).

C A U T I O N !
Secure screws against relieving by means of glue (e. g. Loctite 243 medium-tight).

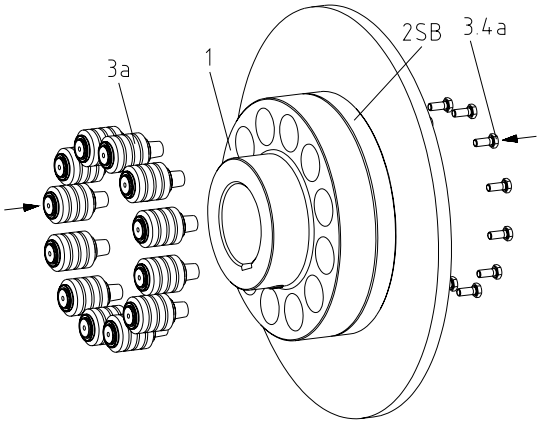

picture 11

4 Assembly

4.5 Assembly of the type KX-D – SB

Only for delivery of individual parts (FN hub and brake disc):

- Screw up the brake disc (component 8b) to the FN hub part 5SB (component 5SB) and tighten the hexagon head screws (component 9) evenly to the tightening torques mentioned in table 5 by means of a dynamometric screwdriver (see picture 12).

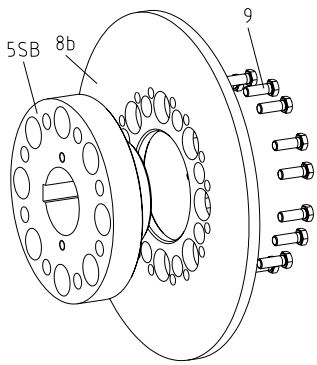

picture 12

- Drive the sleeves (component 6) into the smaller bores of the hubs part 5 (component 5) or part 5SB, respectively by light strokes (see picture 13).

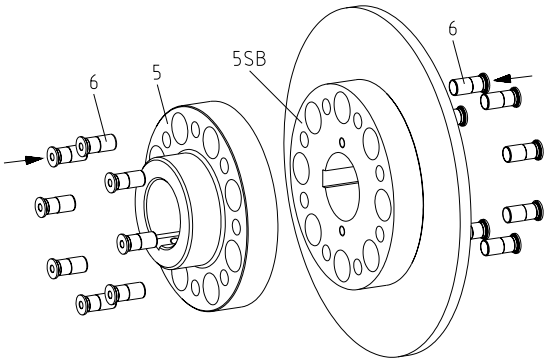

picture 13

- Please assemble the hubs onto the shafts of the drive and driven side in a way that the end faces of the coupling hubs are flush with the faces of the shafts (see picture 14).
- Move the power packs in axial direction until the dimension E is achieved (see picture 15).
- If the power packs are already firmly assembled, axial movement of the hubs on the shafts allows for adjusting the dimension E.
- Fasten the hubs by tightening the setscrews DIN EN ISO 4029 at the tightening torque acc. to table 9.
- Align the coupling hubs in a way that the bores for the pins are in alignment.

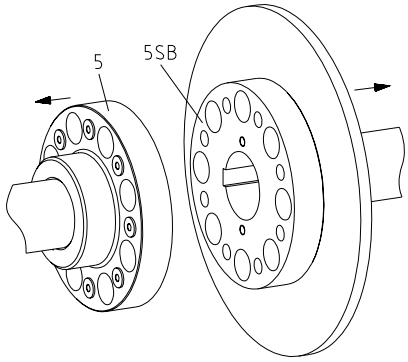

picture 14

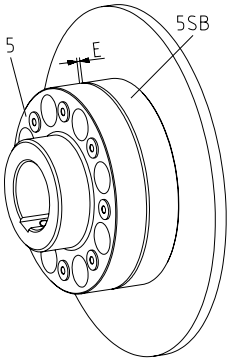

picture 15

C A U T I O N !
Please consider permissible shaft displacements from chapter 4.7!

4 Assembly

4.5 Assembly of the type KX-D – SB

- Insert the pins (component 3c) into the bigger holes of the hub part 5 or FN hub part 5SB, respectively (see picture 16).
- Screw up the pins to the hexagon head screws (component 3.4c) and tighten them evenly to the tightening torques mentioned in table 6 by means of a dynamometric screwdriver (see picture 16).

C A U T I O N !
Secure screws against relieving by means of glue (e. g. Loctite 243 medium-tight).

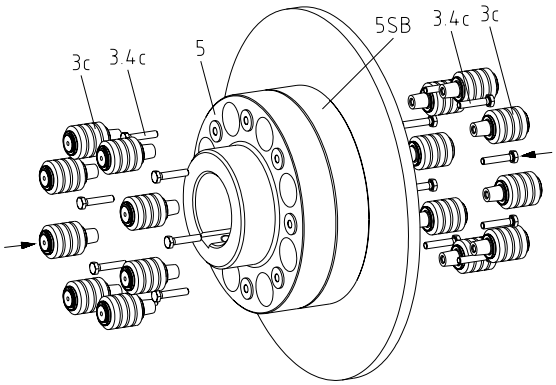

picture 16

4.6 Hints Regarding the Finish Bore

D A N G E R !
The maximum permissible bore diameters d (see table 1 to 4 in chapter 1 - Technical Data) must not be exceeded. If these figures are disregarded, the coupling may tear. Rotating particles may cause serious danger.

- Hub bores machined by the customer have to observe concentric running or axial running, respectively (see picture 17).
- Please make absolutely sure to observe the figures for d_{max}.
- Carefully align the hubs when the finish bores are brought in.
- The bore tolerance should be selected as per table 10 preferably.
- Please use a setscrew according to DIN EN ISO 4029 with a cup point or an end plate to fasten the hubs axially.

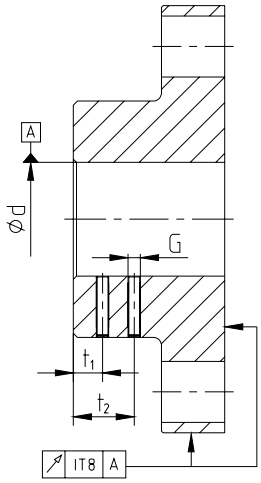

picture 17: concentric running and axial running

C A U T I O N !
The orderer is responsible for all subsequently made machinings to unbored or pilot bored and to finish machined coupling parts and spare parts. KTR does not assume any warranty claims resulting from insufficient refinish.

Table 9: Setscrews DIN EN ISO 4029

Size (KX / KX-D)	105	120	135	150	170	190	215	240
Dimension G [mm]	M20	M24	M24	M24	M24	M24	M24	M24
Dimension t_1 [mm]	40	30	45	45	50	50	50	50
Dimension t_2 [mm]	-	-	-	-	-	-	110	110
Tightening torque T_A [Nm]	140	220	220	220	220	220	220	220

4 Assembly

4.6 Hints Regarding the Finish Bore

Table 10: Recommended combinations of fit acc. to DIN 748/1

Bore [mm]		Shaft tolerance	Bore tolerance
above	to		
	50	k6	H7 (KTR-Standard)
50		m6	

If a feather key is intended to be used in the hub, it should correspond to the tolerance ISO JS9 (KTR-Standard) with normal operating conditions or ISO P9 with heavy operating conditions (frequently alternating torsional direction, shock loads, etc.). In this case the keyway should be flush with one of the hub bores for the pins. For the axial fastening of the set screw the tapping should be made on the keyway.

The transmissible torque of the shaft/hub connection must be checked by the orderer, and he is responsible for the same.

Unbored/pilot bored hubs are supplied without balancing. If balancing is necessary subject to the application, it should be made after having completed the finish bore. The balancing bores have to be made in the positions marked in picture 18.

C A U T I O N !
The balancing bores have to be made between the pin bores in every case.

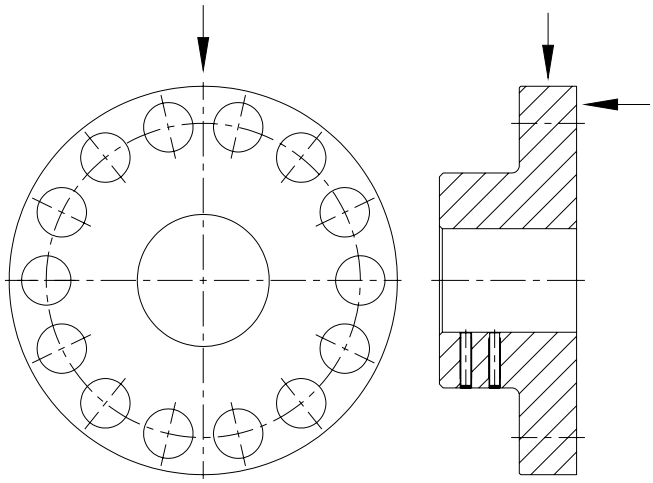

Picture 18

4.7 Displacements - Alignment of the Couplings

REVOLEX® KX / KX-D is able to compensate for displacements of the shafts to be combined as mentioned in table 11. Excessive misalignment may be produced by improper alignment, production tolerances, heat expansion, shaft bending, twisting of machine frames, etc.

C A U T I O N !
In order to ensure a long lifetime of the coupling, the shaft ends must be accurately aligned. Please absolutely observe the displacement figures indicated (see table 11). If the figures are exceeded, the coupling is damaged.
The exacter the alignment of the coupling, the higher is its lifetime.

Please note:

- The displacement figures mentioned in table 11 are maximum figures which must not arise in parallel. If both radial and angular displacements are produced in parallel, the sum of the displacement figures must not exceed ΔK_r or ΔK_w, respectively (see picture 20).
- Please check with a dial gauge, ruler, feeler or laser measuring device whether the permissible displacement figures of table 11 can be observed.

4 Assembly

4.7 Displacements - Alignment of the Couplings

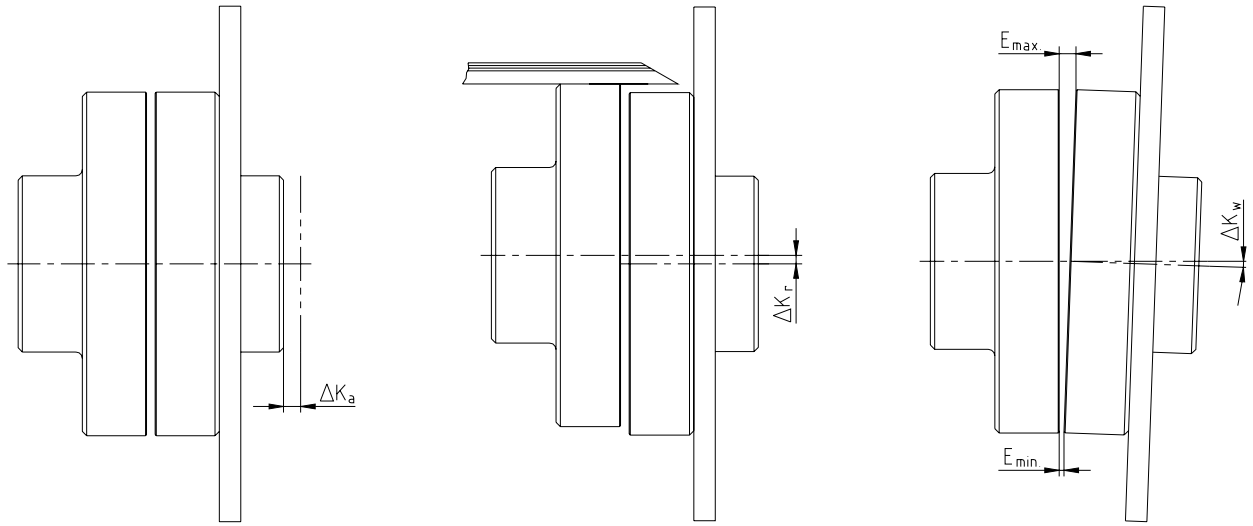

Axial displacements | Radial displacements | Angular displacements

$L_{perm.} = L + \Delta K_a$ [mm]

$\Delta K_w = E_{max.} - E_{min.}$ [mm]

picture 19: displacements

Example for the misalignment combinations given in picture 20:

Example 1:
$\Delta K_r = 30$ %
$\Delta K_w = 70$ %

Example 2:
$\Delta K_r = 60$ %
$\Delta K_w = 40$ %

$\Delta K_{total} = \Delta K_r + \Delta K_w \leq 100$ %

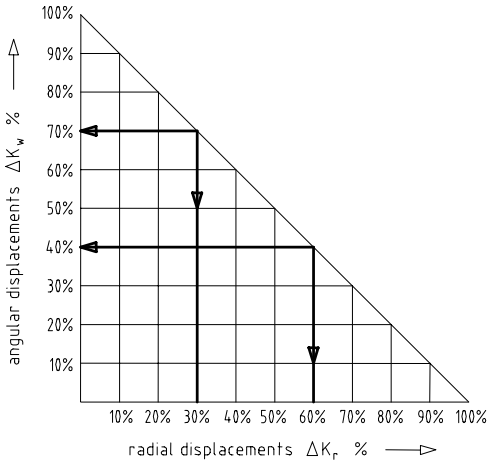

picture 20: combinations of displacement

Table 11: Displacement figures

Size (KX / KX-D)		105	120	135	150	170	190	215	240
Max. axial displacement ΔK_a [mm]		±2	±2	±2	±2	±2,5	±2,5	±2,5	±2,5
Max. radial displacement ΔK_r [mm] or max. angular displacement ΔK_w [mm] at speed n [min^{-1}]	250	1,2	1,3	1,4	1,5	1,7	1,9	2,0	2,2
	500	0,9	0,9	1,0	1,1	1,2	1,3	1,4	1,6
	750	0,7	0,8	0,8	0,9	1,0	1,1	1,2	1,3
	1000	0,6	0,7	0,7	0,8	0,9	0,9	1,0	1,1
	1500	0,5	0,5	0,6	0,6	0,7	0,8	0,8	0,9
	2000	0,4	0,5	0,5	0,5	0,6	0,7	-	-
	3000	0,4	0,4	-	-	-	-	-	-

4 Assembly

4.8 Breakdowns, Causes and Elimination

The below-mentioned errors can lead to an incorrect use of the **REVOLEX® KX / KX-D** coupling. In addition to the stipulations in these operating and mounting instructions please make sure to avoid these errors.
The errors listed can only be clues to search for the errors. When searching for the error the adjacent components must be generally included.

General errors incorrect use

- Important data for the coupling selection was not forwarded.
- The calculation of the shaft/hub connection was not considered.
- Coupling parts with damage occurred during transport are assembled.
- If the heated hubs are assembled, the permissible temperature is exceeded.
- The fits of the parts to be assembled are not coordinated with each other.
- Tightening torques are below/exceeded.
- Components are exchanged by mistake/put together incorrectly.
- A wrong or no pin/elastomer ring is inserted into the coupling.
- No original KTR parts (purchased parts) are used.
- Old/already worn out or superimposed elastomer rings are used. Old/already worn out elastomer rings or elastomer rings stored too long are used.
- The coupling used/the coupling protection used is not suitable for the operation in hazardous areas and does not correspond to EC Standard 94/9/EC, respectively.
- Maintenance intervals are not observed.

Breakdowns	Causes	Elimination
Change of the running noises and/or occurring vibrations	Misalignment	1) Put the unit out of operation 2) Eliminate the reason for the misalignment (e. g. loose foundation bolts, break of the engine fixing, heat expansion of unit components, change of the assembly dimension E of the coupling) 3) Checking of wear see under point Control
	Wear of elastomers	1) Put the unit out of operation 2) Disassemble the coupling and remove rests of the elastomer ring/pin 3) Check coupling parts and exchange damaged coupling hubs 4) Generally assemble new elastomer rings with new pins 5) Assemble the coupling components 6) Check alignment, correct if necessary
	Thread for setscrews for axial fastening of hubs is loose	1) Put the unit out of operation 2) Review the coupling alignment 3) Tighten the thread for setscrews for fastening of the hubs against slackening 4) Checking of wear see under point Control
Break of hub	Fracture of the hub due to high shock energy/overload	1) Put the unit out of operation 2) Change complete coupling 3) Find out the reason of overload 4) Check alignment
	Operating parameters do not correspond to the performance of the coupling	1) Put the unit out of operation 2) Check the operating parameters and select a larger coupling (consider installation space) 3) Assemble new coupling size 4) Check alignment
	Mistake in service of the unit	1) Put the unit out of operation 2) Change complete coupling 3) Check alignment 4) Instruct and train the service staff

4 Assembly

4.8 Breakdowns, Causes and Elimination

Breakdowns	Causes	Elimination
Early wear of the elastomer	e. g. contact with aggressive liquids/ oils, ozone-influence, too high/low ambient temperatures etc. effecting a physical change of the elastomer ring	1) Put the unit out of operation 2) Disassemble the coupling and remove rests of the elastomer ring/pin 3) Check coupling parts and exchange damaged coupling hubs 4) Generally assemble new elastomer rings with new pins 5) Assemble the coupling components 6) Check alignment, correct if necessary 7) Please make sure that other physical modifications of the pins are excluded
	ambient/contact temperatures which are too high for the elastomer ring, max. permissible -30 °C/+80 °C	1) Put the unit out of operation 2) Disassemble the coupling and remove rests of the elastomer ring/pin 3) Check coupling parts and exchange damaged coupling hubs 4) Generally assemble new elastomer rings with new pins 5) Assemble the coupling components 6) Check alignment, correct if necessary 7) Review and regulate the ambient/contact temperature
Early wear of pins (hardening/embrittlement of the pin elastomer)	Drive vibrations	1) Put the unit out of operation 2) Disassemble the coupling and remove rests of the elastomer ring/pin 3) Determine the reason for vibrations 4) Check coupling parts and exchange damaged coupling hubs 5) Generally assemble new elastomer rings with new pins 6) Assemble the coupling components 7) Check alignment, correct if necessary

☞ **A T T E N T I O N !**
KTR does not assume any liabilities or guarantees regarding the use of spare parts and accessories which are not provided by KTR and for the damages resulting herefrom.

4.9 Spares Inventory, Customer Service Addresses

A basic requirement to guarantee the operational readiness of the coupling is a stock of the most important spare parts on site.

Contact addresses of the KTR partners for spare parts and orders can be obtained from the KTR homepage under www.ktr.com.