# REVOLEX® KX / KX-D
# Pin & bush coupling

Flexible pin & bush couplings
types KX and KX-D
and their combinations

according to Standard 94/9/EC
(ATEX 95) for finish bored, pilot
bored and unbored couplings

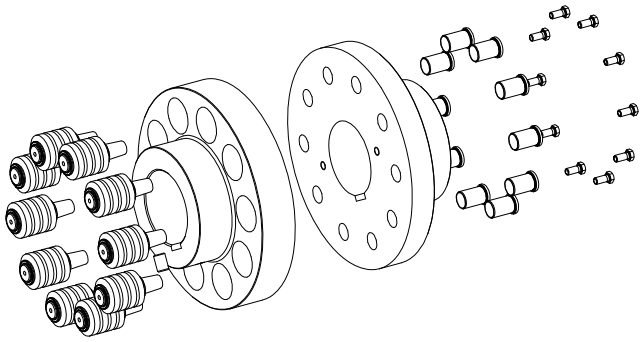

**Type KX (taper pin design B)**

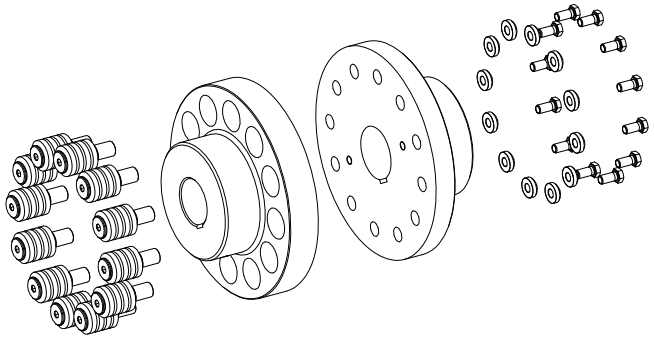

**Type KX (cylindrical pin design A)**

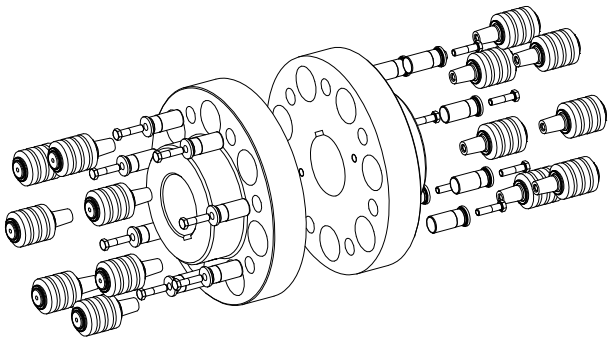

**Type KX-D (taper pin design B)**

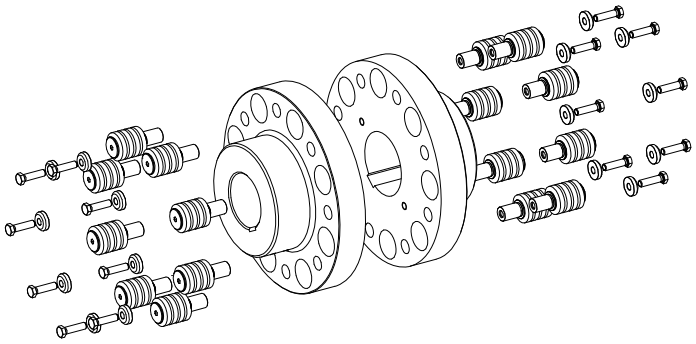

**Type KX-D (cylindrical pin design A)**

**REVOLEX® KX / KX-D** is a torsionally flexible pin & bush coupling. It is able to compensate for shaft displacement caused by, as an example, inaccuracies in production, heat expansion, etc.

## Table of Contents

**1 Technical Data**

**2 Hints**

2.1 Coupling Selection
2.2 General Hints
2.3 Safety and Advice Hints
2.4 General Hints to Danger
2.5 Proper Use

**3 Storage**

**4 Assembly**

4.1 Components of the Couplings
4.2 Components of the Pins
4.3 Assembly of the Coupling (General)
4.4 Assembly of the Type KX
4.5 Assembly of the Type KX-D
4.6 Hint Regarding the Finish Bore
4.7 Displacements - Alignment of the Couplings
4.8 Spares Inventory, Customer Service Addresses

**5 Enclosure A**

**Hints and Instructions Regarding the Use in Ex Hazardous Areas**

5.1 Use in Ex Hazardous Areas According to the Regulations
5.2 Control Intervals for Couplings in Ex Hazardous Areas
5.3 Approximate Values of Wear
5.4 Permissible Coupling Materials in the Ex Hazardous Area
5.5 Ex Marking of Coupling for the Hazardous Area
5.6 Starting
5.7 Breakdowns, Causes and Elimination
5.8 Rating of Danger of Ignition
5.9 EC Certificate of Conformity according to the EC Standards 94/9/EC dated 23 March 1994

## 1 Technical Data

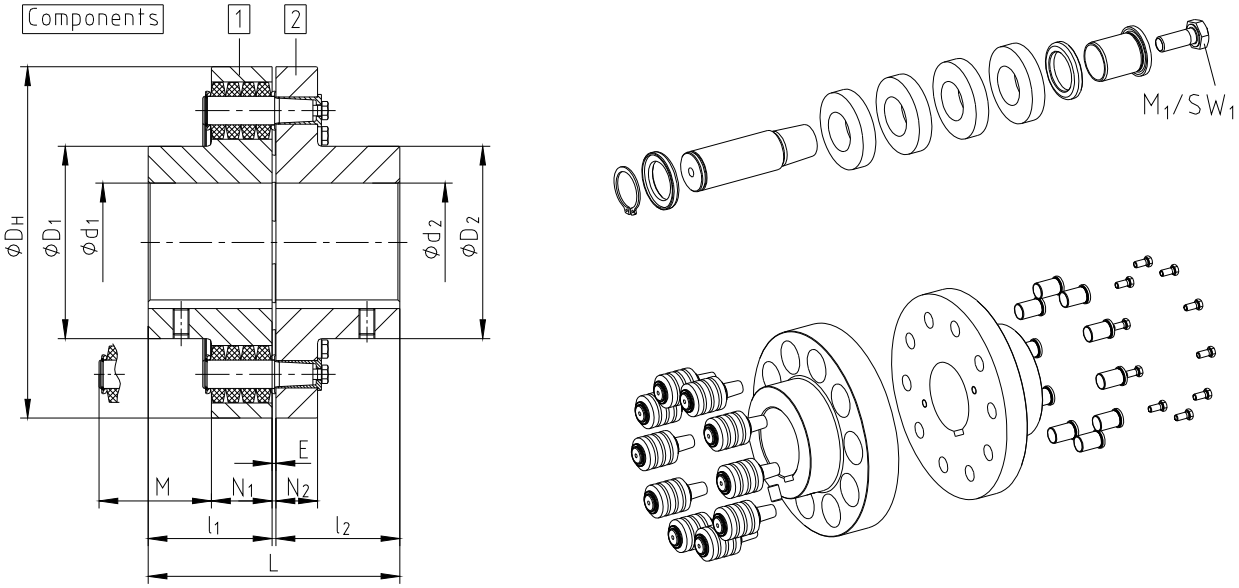


picture 1: REVOLEX®, type KX (taper pin design B)

**Table 1: Torques and dimensions – type KX (taper pin design B)**

| REVOLEX® KX | | | | | | | | | | | | | | | |
|---|---|---|---|---|---|---|---|---|---|---|---|---|---|---|---|
| Size | Torques 1) [Nm] | | Cast iron | | Steel | | Dimensions [mm] | | | | | | | | |
| | | | | | | | General | | | | | | | | |
| | $T_{KN}$ | $T_{K\,max.}$ | Max. Speed 2) [1/min] | Finish bore max. 3) $d_1/d_2$ | Max. Speed 2) [1/min] | Finish bore max. 3) $d_1/d_2$ | L | $l_1$; $l_2$ | E | $D_H$ | $D_1$ | $D_2$ | $N_1$ | $N_2$ | M* |
| KX 105 | 6485 | 12970 | 2000 | 110/125 | 3475 | 120/135 | 237 | 117 | 3 | 330 | 180 | 202 | 56 | 30 | 76 |
| KX 120 | 10080 | 21060 | 1800 | 125/145 | 3100 | 140/155 | 270 | 132 | 6 | 370 | 206 | 232 | 76 | 46 | 100 |
| KX 135 | 14030 | 28060 | 1600 | 140/150 | 2725 | 160/165 | 300 | 147 | 6 | 419 | 230 | 240 | 76 | 46 | 100 |
| KX 150 | 17960 | 35920 | 1450 | 160 | 2500 | 185 | 336 | 165 | 6 | 457 | 256 | 260 | 76 | 46 | 100 |
| KX 170 | 26360 | 52720 | 1250 | 180 | 2150 | 220 | 382 | 188 | 6 | 533 | 292 | 292 | 92 | 63 | 130 |
| KX 190 | 36160 | 72320 | 1100 | 205 | 1900 | 245 | 428 | 211 | 6 | 597 | 330 | 330 | 92 | 63 | 130 |
| KX 215 | 48160 | 96320 | 1000 | 230 | 1725 | 275 | 480 | 237 | 6 | 660 | 368 | 368 | 92 | 63 | 130 |
| KX 240 | 65740 | 131480 | 900 | 250 | 1550 | 310 | 534 | 264 | 6 | 737 | 407 | 407 | 122 | 76 | 170 |
| KX 265 | 91480 | 182960 | 800 | 285 | 1375 | 350 | 590 | 292 | 6 | 826 | 457 | 457 | 122 | 76 | 170 |
| KX 280 | 123530 | 247060 | 720 | 315 | 1225 | 385 | 628 | 311 | 6 | 927 | 508 | 508 | 122 | 76 | 170 |
| KX 305 | 152840 | 305680 | 675 | 330 | 1150 | 405 | 654 | 324 | 6 | 991 | 533 | 533 | 122 | 76 | 170 |
| KX 330 | 188470 | 376940 | 625 | 355 | 1075 | 435 | 666 | 330 | 6 | 1067 | 572 | 572 | 122 | 76 | 170 |
| KX 355 | 230110 | 460220 | 575 | 380 | 975 | 465 | 718 | 356 | 6 | 1156 | 610 | 610 | 122 | 76 | 170 |
| KX 370 | 302500 | 605000 | 535 | 450 | 900 | 550 | 770 | 382 | 6 | 1250 | 720 | 720 | 122 | 76 | 170 |

1) Standard material NBR (perbunan) 80 ± 5 Shore A
2) Dynamic balancing required
3) Bore H7 with feather keyway according to DIN 6885, sheet 1 [JS9] and thread for setscrews on the keyway (see table 11)

* Drop-out center dimension

**Table 2: Pin – type KX (taper pin design B)**

| Size | KX 105 | KX 120 | KX 135 | KX 150 | KX 170 | KX 190 | KX 215 | KX 240 | KX 265 | KX 280 | KX 305 | KX 330 | KX 355 | KX 370 |
|---|---|---|---|---|---|---|---|---|---|---|---|---|---|---|
| Pin size | 3 | 4 | | | 5 | | | 6 | | | | | | |
| $M_1$ [mm] | M10 | M12 | | | M16 | | | M24 | | | | | | |
| $SW_1$ [mm] | 16 | 18 | | | 24 | | | 36 | | | | | | |
| Tightening torque $T_A$ [Nm] | 67 | 115 | | | 290 | | | 970 | | | | | | |

## 1 Technical Data

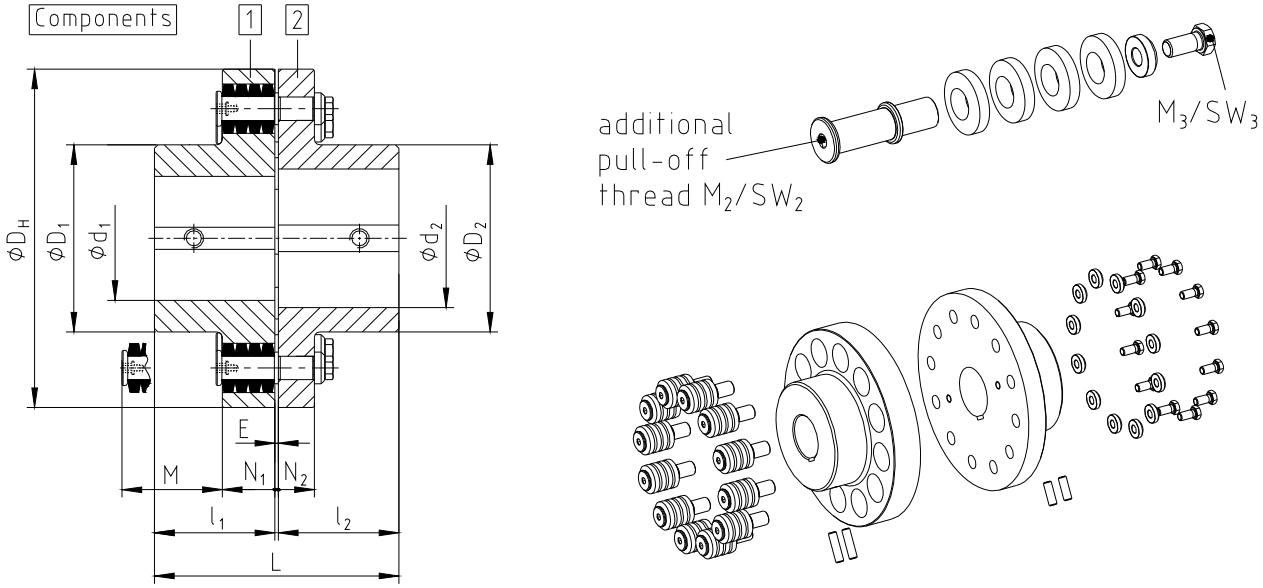


picture 2: REVOLEX®, type KX (cylindrical pin design A)

**Table 3: Torques and dimensions – type KX (cylindrical pin design A)**

| REVOLEX® KX | | | | | | | | | | | | | | | |
|---|---|---|---|---|---|---|---|---|---|---|---|---|---|---|---|
| Size | Torques 1) [Nm] | | Cast iron | | Steel | | Dimensions [mm] | | | | | | | | |
| | | | | | | | General | | | | | | | | |
| | $T_{KN}$ | $T_{K\,max.}$ | Max. Speed 2) [1/min] | Finish bore max. 3) $d_1/d_2$ | Max. Speed 2) [1/min] | Finish bore max. 3) $d_1/d_2$ | L | $l_1$; $l_2$ | E | $D_H$ | $D_1$ | $D_2$ | $N_1$ | $N_2$ | M* |
| KX 105 | 6485 | 12970 | 2000 | 110/125 | 3475 | 120/135 | 237 | 117 | 3 | 330 | 180 | 202 | 56 | 30 | 76 |
| KX 120 | 10080 | 21060 | 1800 | 125/145 | 3100 | 140/155 | 270 | 132 | 6 | 370 | 206 | 232 | 76 | 46 | 96 |
| KX 135 | 14030 | 28060 | 1600 | 140/150 | 2725 | 160/165 | 300 | 147 | 6 | 419 | 230 | 240 | 76 | 46 | 101 |
| KX 150 | 17960 | 35920 | 1450 | 160 | 2500 | 185 | 336 | 165 | 6 | 457 | 256 | 260 | 76 | 46 | 99 |
| KX 170 | 26360 | 52720 | 1250 | 180 | 2150 | 220 | 382 | 188 | 6 | 533 | 292 | 292 | 92 | 63 | 131 |
| KX 190 | 36160 | 72320 | 1100 | 205 | 1900 | 245 | 428 | 211 | 6 | 597 | 330 | 330 | 92 | 63 | 129 |
| KX 215 | 48160 | 96320 | 1000 | 230 | 1725 | 275 | 480 | 237 | 6 | 660 | 368 | 368 | 92 | 63 | 145 |
| KX 240 | 65740 | 131480 | 900 | 250 | 1550 | 310 | 534 | 264 | 6 | 737 | 407 | 407 | 122 | 76 | 167 |
| KX 265 | 91480 | 182960 | 800 | 285 | 1375 | 350 | 590 | 292 | 6 | 826 | 457 | 457 | 122 | 76 | 170 |
| KX 280 | 123530 | 247060 | 720 | 315 | 1225 | 385 | 628 | 311 | 6 | 927 | 508 | 508 | 122 | 76 | 189 |
| KX 305 | 152840 | 305680 | 675 | 330 | 1150 | 405 | 654 | 324 | 6 | 991 | 533 | 533 | 122 | 76 | 202 |
| KX 330 | 188470 | 376940 | 625 | 355 | 1075 | 435 | 666 | 330 | 6 | 1067 | 572 | 572 | 122 | 76 | 208 |
| KX 355 | 230110 | 460220 | 575 | 380 | 975 | 465 | 718 | 356 | 6 | 1156 | 610 | 610 | 122 | 76 | 234 |
| KX 370 | 302500 | 605000 | 535 | 450 | 900 | 550 | 770 | 382 | 6 | 1250 | 720 | 720 | 122 | 76 | 260 |

1) Standard material NBR (perbunan) 80 ± 5 Shore A
2) Dynamic balancing required
3) Bore H7 with feather keyway according to DIN 6885, sheet 1 [JS9] and thread for setscrews on the keyway (see table 11)

* Drop-out center dimension

**Table 4: Pin – type KX (cylindrical pin design A)**

| Size | KX 105 | KX 120 | KX 135 | KX 150 | KX 170 | KX 190 | KX 215 | KX 240 | KX 265 | KX 280 | KX 305 | KX 330 | KX 355 | KX 370 |
|---|---|---|---|---|---|---|---|---|---|---|---|---|---|---|
| Pin size | 3 | 4 | | | 5 | | | 6 | | | | | | |
| $M_2$ [mm] | M12 | M12 | | | M16 | | | M16 | | | | | | |
| $M_3$ [mm] | M16 | M20 | | | M24 | | | M27 | | | | | | |
| $SW_2$ [mm] | 17 | 17 | | | 17 | | | 17 | | | | | | |
| $SW_3$ [mm] | 24 | 30 | | | 36 | | | 41 | | | | | | |
| Tightening torque $T_A$ [Nm] | 290 | 560 | | | 970 | | | 1450 | | | | | | |

## 1 Technical Data

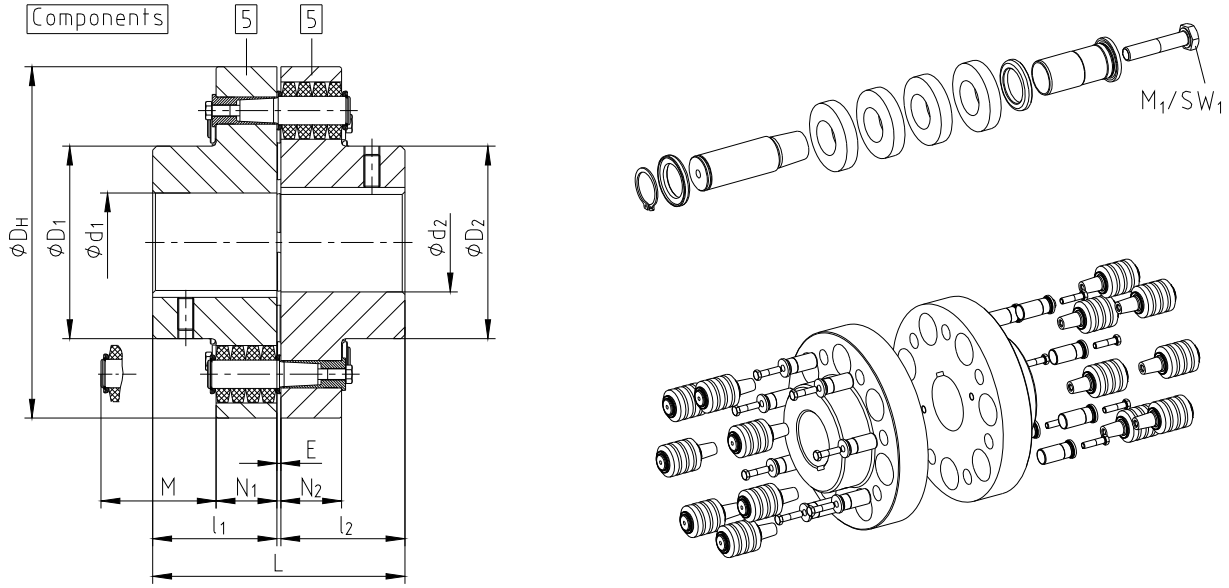


picture 3: REVOLEX®, type KX-D (taper pin design B)

**Table 5: Torques and dimensions – type KX-D (taper pin design B)**

| REVOLEX® KX-D | | | | | | | | | | | | | |
|---|---|---|---|---|---|---|---|---|---|---|---|---|---|
| Size | Torques 1) [Nm] | | Cast iron | | Steel | | Dimensions [mm] | | | | | | |
| | | | | | | | General | | | | | | |
| | $T_{KN}$ | $T_{K\,max.}$ | Max. Speed 2) [1/min] | Finish bore max. 3) $d_1/d_2$ | Max. Speed 2) [1/min] | Finish bore max. 3) $d_1/d_2$ | L | $l_1$; $l_2$ | E | $D_H$ | $D_1$, $D_2$ | $N_1$; $N_2$ | M* |
| KX-D 105 | 8650 | 17300 | 2000 | 110 | 3475 | 120 | 237 | 117 | 3 | 330 | 180 | 56 | 76 |
| KX-D 120 | 14110 | 28220 | 1800 | 125 | 3100 | 140 | 270 | 132 | 6 | 370 | 206 | 76 | 100 |
| KX-D 135 | 18690 | 37380 | 1600 | 140 | 2725 | 160 | 300 | 147 | 6 | 419 | 230 | 76 | 100 |
| KX-D 150 | 23100 | 46200 | 1450 | 160 | 2500 | 185 | 336 | 165 | 6 | 457 | 256 | 76 | 100 |
| KX-D 170 | 36900 | 73800 | 1250 | 180 | 2150 | 220 | 382 | 188 | 6 | 533 | 292 | 92 | 130 |
| KX-D 190 | 48210 | 96420 | 1100 | 205 | 1900 | 245 | 428 | 211 | 6 | 597 | 330 | 92 | 130 |
| KX-D 215 | 61900 | 123800 | 1000 | 230 | 1725 | 275 | 480 | 237 | 6 | 660 | 368 | 92 | 130 |
| KX-D 240 | 920300 | 184060 | 900 | 250 | 1550 | 310 | 534 | 264 | 6 | 737 | 407 | 122 | 170 |
| KX-D 265 | 121900 | 243800 | 800 | 285 | 1375 | 350 | 590 | 292 | 6 | 826 | 457 | 122 | 170 |
| KX-D 280 | 158800 | 317600 | 720 | 315 | 1225 | 385 | 628 | 311 | 6 | 927 | 508 | 122 | 170 |
| KX-D 305 | 191060 | 382120 | 675 | 330 | 1150 | 405 | 654 | 324 | 6 | 991 | 533 | 122 | 170 |
| KX-D 330 | 251200 | 502400 | 625 | 355 | 1075 | 435 | 666 | 330 | 6 | 1067 | 572 | 122 | 170 |
| KX-D 355 | 299100 | 598200 | 575 | 380 | 975 | 465 | 718 | 356 | 6 | 1156 | 610 | 122 | 170 |
| KX-D 370 | 377800 | 755600 | 535 | 450 | 900 | 550 | 770 | 382 | 6 | 1250 | 720 | 122 | 170 |

1) Standard material NBR (perbunan) 80 ± 5 Shore A
2) Dynamic balancing required
3) Bore H7 with feather keyway according to DIN 6885, sheet 1 [JS9] and thread for setscrews on the keyway (see table 11)

* Drop-out center dimension

**Table 6: Pin – type KX-D (taper pin design B)**

| Size | KX-D 105 | KX-D 120 | KX-D 135 | KX-D 150 | KX-D 170 | KX-D 190 | KX-D 215 | KX-D 240 | KX-D 265 | KX-D 280 | KX-D 305 | KX-D 330 | KX-D 355 | KX-D 370 |
|---|---|---|---|---|---|---|---|---|---|---|---|---|---|---|
| Pin size | 3 | 4 | | | 5 | | | 6 | | | | | | |
| $M_1$ [mm] | M10 | M12 | | | M16 | | | M24 | | | | | | |
| $SW_1$ [mm] | 16 | 18 | | | 24 | | | 36 | | | | | | |
| Tightening torque $T_A$ [Nm] | 67 | 115 | | | 290 | | | 970 | | | | | | |

## 1 Technical Data

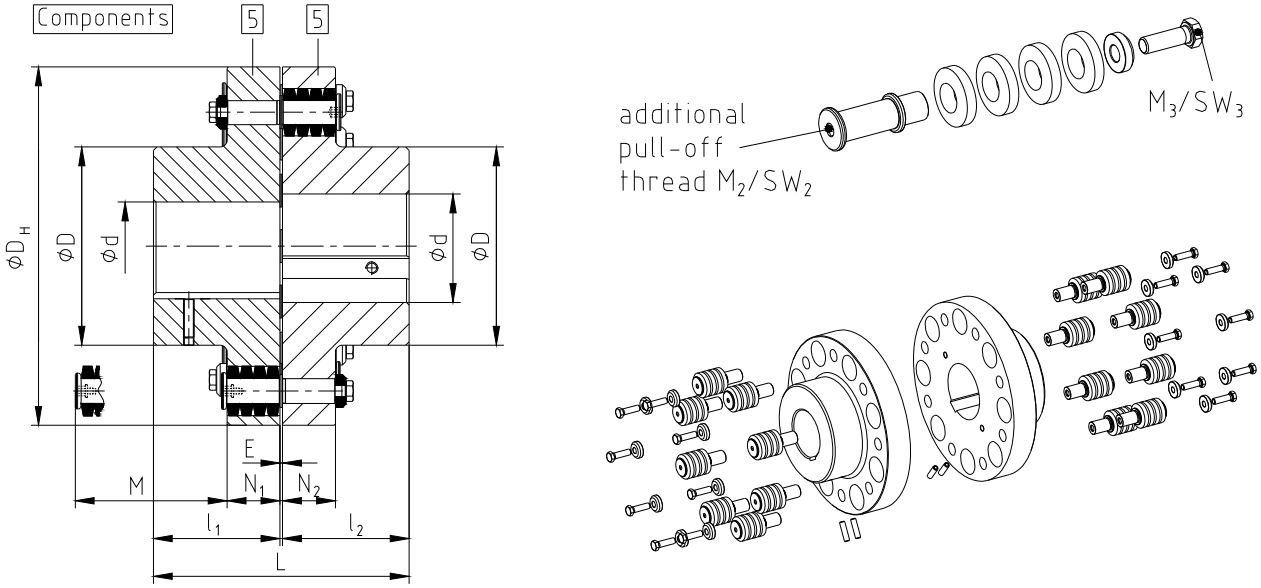


picture 4: REVOLEX®, type KX-D (cylindrical pin design A)

**Table 7: Torques and dimensions – type KX-D (cylindrical pin design A)**

| REVOLEX® KX-D | | | | | | | | | | | | | |
|---|---|---|---|---|---|---|---|---|---|---|---|---|---|
| Size | Torques [1] [Nm] | | Cast iron | | Steel | | Dimensions [mm] | | | | | | |
| | | | | | | | General | | | | | | |
| | $T_{KN}$ | $T_{K\,max.}$ | Max. Speed [2] [1/min] | Finish bore max. [3] $d_1/d_2$ | Max. Speed [2] [1/min] | Finish bore max. [3] $d_1/d_2$ | L | $l_1$; $l_2$ | E | $D_H$ | D | $N_1$; $N_2$ | M* |
| KX-D 105 | 8650 | 17300 | 2000 | 110 | 3475 | 120 | 237 | 117 | 3 | 330 | 180 | 56 | 76 |
| KX-D 120 | 14110 | 28220 | 1800 | 125 | 3100 | 140 | 270 | 132 | 6 | 370 | 206 | 76 | 96 |
| KX-D 135 | 18690 | 37380 | 1600 | 140 | 2725 | 160 | 300 | 147 | 6 | 419 | 230 | 76 | 101 |
| KX-D 150 | 23100 | 46200 | 1450 | 160 | 2500 | 185 | 336 | 165 | 6 | 457 | 256 | 76 | 99 |
| KX-D 170 | 36900 | 73800 | 1250 | 180 | 2150 | 220 | 382 | 188 | 6 | 533 | 292 | 92 | 131 |
| KX-D 190 | 48210 | 96420 | 1100 | 205 | 1900 | 245 | 428 | 211 | 6 | 597 | 330 | 92 | 129 |
| KX-D 215 | 61900 | 123800 | 1000 | 230 | 1725 | 275 | 480 | 237 | 6 | 660 | 368 | 92 | 145 |
| KX-D 240 | 920300 | 184060 | 900 | 250 | 1550 | 310 | 534 | 264 | 6 | 737 | 407 | 122 | 167 |
| KX-D 265 | 121900 | 243800 | 800 | 285 | 1375 | 350 | 590 | 292 | 6 | 826 | 457 | 122 | 170 |
| KX-D 280 | 158800 | 317600 | 720 | 315 | 1225 | 385 | 628 | 311 | 6 | 927 | 508 | 122 | 189 |
| KX-D 305 | 191060 | 382120 | 675 | 330 | 1150 | 405 | 654 | 324 | 6 | 991 | 533 | 122 | 202 |
| KX-D 330 | 251200 | 502400 | 625 | 355 | 1075 | 435 | 666 | 330 | 6 | 1067 | 572 | 122 | 208 |
| KX-D 355 | 299100 | 598200 | 575 | 380 | 975 | 465 | 718 | 356 | 6 | 1156 | 610 | 122 | 234 |
| KX-D 370 | 377800 | 755600 | 535 | 450 | 900 | 550 | 770 | 382 | 6 | 1250 | 720 | 122 | 260 |

1) Standard material NBR (perbunan) 80 ± 5 Shore A
2) Dynamic balancing required
3) Bore H7 with feather keyway according to DIN 6885, sheet 1 [JS9] and thread for setscrews on the keyway (see table 11)

* Drop-out center dimension

**Table 8: Pin – type KX-D (cylindrical pin design A)**

| Size | KX-D 105 | KX-D 120 | KX-D 135 | KX-D 150 | KX-D 170 | KX-D 190 | KX-D 215 | KX-D 240 | KX-D 265 | KX-D 280 | KX-D 305 | KX-D 330 | KX-D 355 | KX-D 370 |
|---|---|---|---|---|---|---|---|---|---|---|---|---|---|---|
| Pin size | 3 | 4 | | | 5 | | | 6 | | | | | | |
| $M_2$ [mm] | M12 | M12 | | | M16 | | | M16 | | | | | | |
| $M_3$ [mm] | M16 | M20 | | | M24 | | | M27 | | | | | | |
| $SW_2$ [mm] | 17 | 17 | | | 17 | | | 17 | | | | | | |
| $SW_3$ [mm] | 24 | 30 | | | 36 | | | 41 | | | | | | |
| Tightening torque $T_A$ [Nm] | 290 | 560 | | | 970 | | | 1450 | | | | | | |

## 1 Technical Data

The rated torques apply under the following conditions:

- Use of original KTR components made of perbunan or natural rubber in 80 Shore
- Permanent operation
- Up to 25 torque shocks (up to 3 times the rated torque) per hour
- Adhering to the misalignment figures mentioned
- Operation within the permissible temperature range in consideration of service factors for temperature
  - -30 °C to +80 °C with elastomers made of perbunan (NBR)
  - -50 °C to +70 °C with elastomers made of natural rubber (NR)

## 2 Hints

### 2.1 Coupling Selection

**C A U T I O N !**
**For a continuous and troublefree operation of the coupling it must be designed according to the selection instructions (according to DIN 740 part 2) for the particular application (see company catalogue).**
**We would recommend balancing from a circumferential speed of 30 m/s.**
**If the operating conditions (performance, speed, changes at engine and machine) change, the coupling selection must be checked again.**
**Please make sure that the technical data regarding torque only refers to the elastomers. The transmissible torque of the shaft/hub connection must be checked by the orderer, and he is responsible for the same.**

For drives with endangered torsional vibration (drives with periodical load on torsional vibration) it is necessary to make a torsional vibration calculation to ensure a perfect selection. Typical drives with endangered torsional vibration are e. g. drives with diesel engines, piston pumps, piston compressors etc. On request KTR makes the coupling selection and the torsional vibration calculation.

### 2.2 General Hints

Please read through these mounting instructions carefully before you set the coupling into operation.
Please pay special attention to the safety instructions!

The **REVOLEX®-KX / KX-D** coupling is suitable and approved for the use in hazardous areas. When using the coupling in hazardous areas please observe the special hints and instructions regarding safety in enclosure A.

The mounting instructions are part of your product. Please keep them carefully and close to the coupling.


### 2.3 Safety and Advice Hints

| | |
|---|---|
| **D A N G E R !** | **Danger of injury to persons** |
| **C A U T I O N !** | **Damages on the machine possible** |
| **A T T E N T I O N !** | **Pointing to important items** |
| **P R E C A U T I O N !** | **Hints concerning explosion protection** |

# 2 Hints

## 2.4 General Hints to Danger

**D A N G E R !**
**With assembly, operation and maintenance of the coupling it has to be made sure that the entire drive train is protected against unintentional engagement. You can be seriously hurt by rotating parts. Please make absolutely sure to read through and observe the following safety instructions.**

- All operations on and with the coupling have to be performed taking into account "safety first".
- Please make sure to disengage the power pack before you perform your work.
- Protect the power pack against unintentional engagement, e. g. by providing hints at the place of engagement or removing the fuse for current supply.
- Do not touch the operation area of the coupling as long as it is in operation.
- Please protect the coupling against unintentional touch. Please provide for the necessary protection devices and caps.

## 2.5 Proper Use

You may only assemble, operate and maintain the coupling if you

- have carefully read through the mounting instructions and understood them
- had technical training
- are authorized to do so by your company

The coupling may only be used in accordance with the technical data (see table 1 to 8 in chapter 1).
Unauthorized modifications on the coupling design are not admissible. We do not take any warranty for resulting damages. To further develop the product we reserve the right for technical modifications.
The **REVOLEX® KX / KX-D** described in here corresponds to the technical status at the time of printing of these mounting instructions.

# 3 Storage

The coupling hubs are supplied in preserved condition and can be stored at a dry and roofed place for 6 - 9 months.
The features of the elastomer ring remain unchanged for up to 5 years in case of favourable stock conditions.

**C A U T I O N !**
**The storage rooms may not include any ozone-generating devices, like e. g. fluorescent light sources, mercury-vapour lamps or electrical high-voltage appliances.**
**Humid storage rooms are not suitable.**
**Please make sure that there is no condensation. The best relative air humidity is under 65%.**

## 4 Assembly

Basically the coupling is supplied in individual parts. Before assembly the coupling has to be controlled for completeness.

### 4.1 Components of the Couplings

**Components of REVOLEX®, type KX (taper pin design B)**

| Component | Quantity | Designation |
|---|---|---|
| 1 [1)] | 1 | Hub part 1 |
| 2 [1)] | 1 | Hub part 2 |
| 3a | See table 9 | Complete pin KX (design B) |
| 4 | See table 9 | KX sleeve |
| 7 [2)] | | Setscrew acc. to DIN EN ISO 4029 |

1) Material and balancing condition on request of the customer
2) Axial fastening of the hub and tolerances of the shaft-hub-connections on request of the customer

**Components of REVOLEX®, type KX (cylindrical pin design A)**

| Component | Quantity | Designation |
|---|---|---|
| 1 [1)] | 1 | Hub part 1 |
| 2 [1)] | 1 | Hub part 2 |
| 3b | See table 9 | Complete pin KX (design A) |
| 7 [2)] | | Setscrew acc. to DIN EN ISO 4029 |

1) Material and balancing condition on request of the customer
2) Axial fastening of the hub and tolerances of the shaft-hub-connections on request of the customer

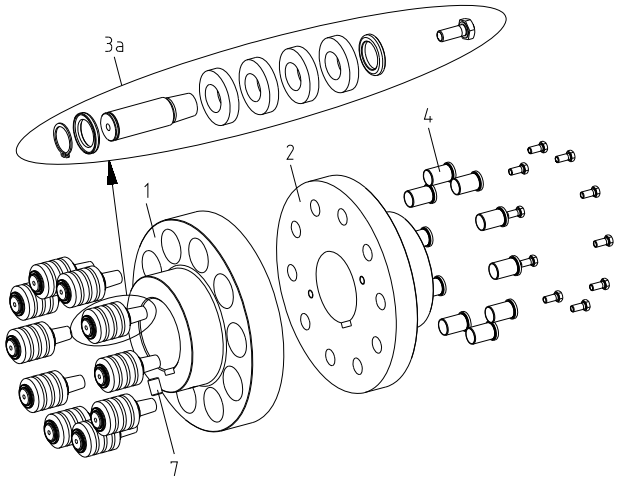


picture 5: REVOLEX®, type KX (taper pin design B)

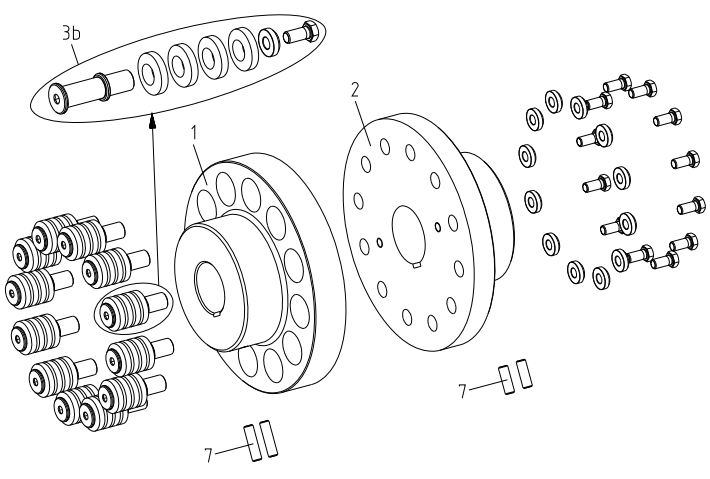


picture 6: REVOLEX®, type KX (cylindrical pin design A)

**Table 9:**

| Number z of components | REVOLEX® Size | | | | | | |
|---|---|---|---|---|---|---|---|
| | KX 105 | KX 120 | KX 135 | KX 150 | KX 170 | KX 190 | KX 215 |
| 3a, 3b, 4, | 12 | 10 | 12 | 14 | 10 | 12 | 14 |

| Number z of components | REVOLEX® Size | | | | | | |
|---|---|---|---|---|---|---|---|
| | KX 240 | KX 265 | KX 280 | KX 305 | KX 330 | KX 355 | KX 370 |
| 3a, 3b, 4, | 10 | 12 | 14 | 16 | 18 | 20 | 24 |

# 4 Assembly

## 4.1 Components of the Couplings

### Components of REVOLEX®, type KX-D (taper pin design B)

| Component | Quantity | Designation |
|---|---|---|
| 3c | See table 10 | Complete pin KX-D (design B) |
| 5 1) | 2 | Hub part 5 |
| 6 | See table 10 | KX-D sleeve |
| 7 2) | | Setscrew acc. to DIN EN ISO 4029 |

1) Material and balancing condition on request of the customer
2) Axial fastening of the hub and tolerances of the shaft-hub-connections on request of the customer

### Components of REVOLEX®, type KX-D (cylindrical pin design A)

| Component | Quantity | Designation |
|---|---|---|
| 3d | See table 10 | Complete pin KX-D (design A) |
| 5 1) | 2 | Hub part 5 |
| 7 2) | | Setscrew acc. to DIN EN ISO 4029 |

1) Material and balancing condition on request of the customer
2) Axial fastening of the hub and tolerances of the shaft-hub-connections on request of the customer

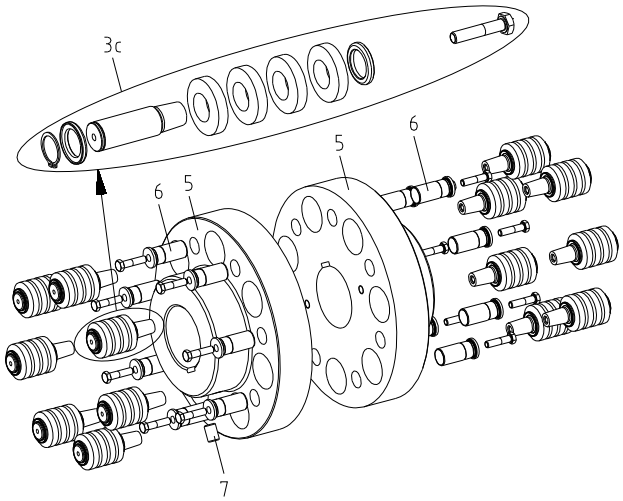


picture 7: REVOLEX®, type KX-D
(taper pin design B)

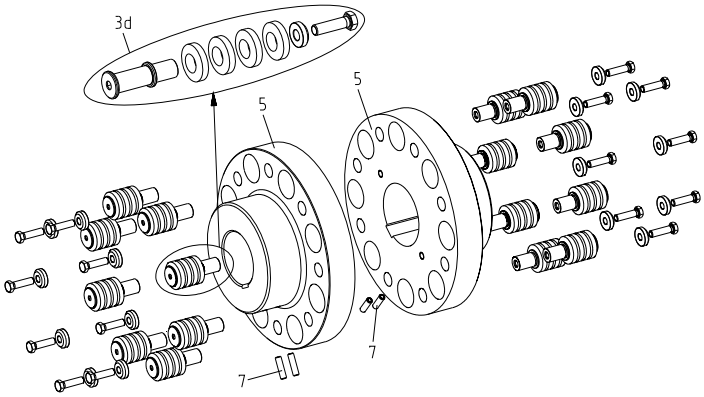


picture 8: REVOLEX®, type KX-D
(cylindrical pin design A)

**Table 10:**

| Number z of components | REVOLEX® Size | | | | | | |
|---|---|---|---|---|---|---|---|
| | KX-D 105 | KX-D 120 | KX-D 135 | KX-D 150 | KX-D 170 | KX-D 190 | KX-D 215 |
| 3c, 3d, 6, | 16 | 14 | 16 | 18 | 14 | 16 | 18 |

| Number z of components | REVOLEX® Size | | | | | | |
|---|---|---|---|---|---|---|---|
| | KX-D 240 | KX-D 265 | KX-D 280 | KX-D 305 | KX-D 330 | KX-D 355 | KX-D 370 |
| 3c, 3d, 6, | 14 | 16 | 18 | 20 | 24 | 26 | 30 |

## 4 Assembly

### 4.2 Components of the Pins

**Components complete pin KX (design B) – component 3a**

| Component | Quantity | Designation |
|---|---|---|
| 3.1b | 1 | Pin KX (design B) |
| 3.2 | 4 | Elastomer ring |
| 3.3b | 2 | Disc |
| 3.4a | 1 | Hexagon head screw acc. to DIN EN ISO 4017 |
| 3.5 | 1 | Circlip DIN 471 |

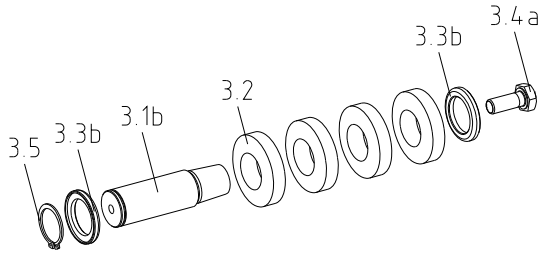


picture 9: Complete pin KX (design B)

**Components complete pin KX (design A) – component 3b**

| Component | Quantity | Designation |
|---|---|---|
| 3.1a | 1 | Pin KX (design A) |
| 3.2 | 4 | Elastomer ring |
| 3.3a | 1 | Disc |
| 3.4b | 1 | Hexagon head screw acc. to DIN EN ISO 4017 |

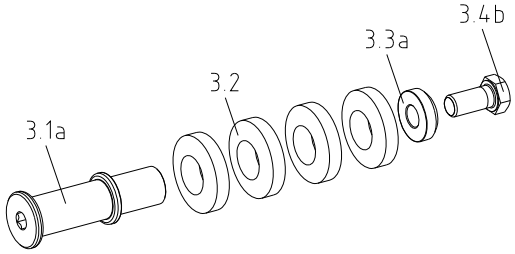


picture 10: Complete pin KX (design A)

**Components complete pin KX-D (design B) – component 3c**

| Component | Quantity | Designation |
|---|---|---|
| 3.1b | 1 | Pin KX-D (design B) |
| 3.2 | 4 | Elastomer ring |
| 3.3b | 2 | Disc |
| 3.4c | 1 | Hexagon head screw acc. to DIN EN ISO 4017 |
| 3.5 | 1 | Circlip DIN 471 |

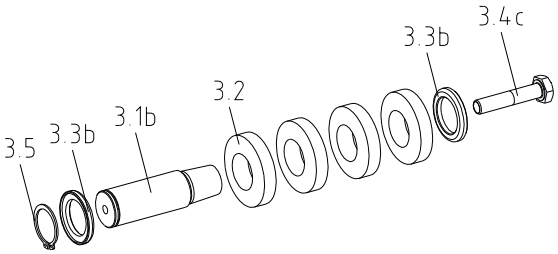


picture 11: Complete pin KX-D (design B)

# 4 Assembly

## 4.2 Components of the Pins

**Components complete pin KX-D (design A) – component 3d**

| Component | Quantity | Designation |
|---|---|---|
| 3.1a | 1 | Pin KX-D (design A) |
| 3.2 | 4 | Elastomer ring |
| 3.3a | 1 | Disc |
| 3.4d | 1 | Hexagon head screw acc. to DIN EN ISO 4017 |

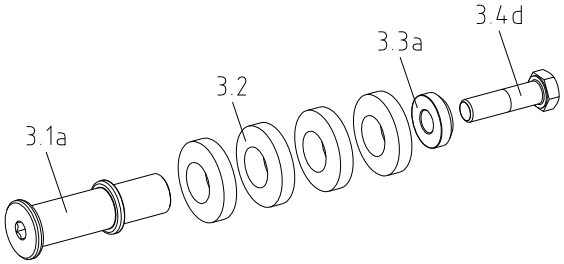


picture 12: Complete pin KX-D (design A)

## 4.3 Assembly of the Coupling (General)

**A T T E N T I O N !**
**We recommend to check bores, shaft, keyway and feather key for dimensional accuracy before assembly.**

Heating the hubs slightly (approx. 80 °C) allows for an easier installation onto the shaft.

**P R E C A U T I O N !**
**Please pay attention to the danger of ignition in hazardous areas.**

**D A N G E R !**
**Touching the heated hubs causes burns.**
**We would recommend to wear safety gloves.**

**C A U T I O N !**
**For the assembly please make sure that the distance dimension E (see table 1, 3, 5 and 7) is adhered to make sure that the hubs do not touch while in operation.**
**Disregarding this hint may cause damage on the coupling.**

**C A U T I O N !**
**With the assembly of screw connections only those screws indicated by the manufacturer have to be used. When tightening the screws the torque indicated by the manufacturer has to be observed. The screws have to be secured against relieving. (e. g. Loctite 243 medium-tight)**

## 4 Assembly

### 4.4 Assembly of the type KX

**Applies only for taper pin design B:**

- Drive the sleeves (component 4) into the bores of the hub part 2 (component 2) by light strokes (see picture 13).

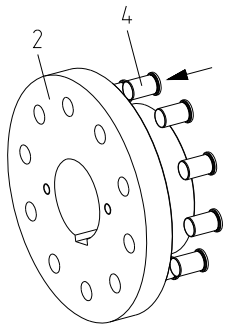


picture 13

**Applies for pin design A and B:**

- Please assemble the hubs onto the shafts of the drive and driven side in a way that the end faces of the coupling hubs are flush with the faces of the shafts (see picture 14).
- Move the power packs in axial direction until the dimension E is achieved (see picture 15).
- If the power packs are already firmly assembled, axial movement of the hubs on the shafts allows for adjusting the dimension E.
- Fasten the hubs by tightening the setscrews DIN EN ISO 4029 at the tightening torque acc. to table 11.
- Align the coupling hubs in a way that the bores for the pins are in alignment.

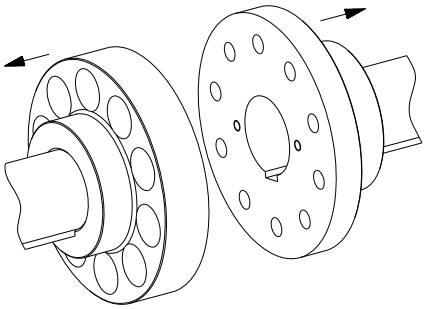

picture 14

**C A U T I O N !**
**Please consider permissible shaft displacements from chapter 4.7!**

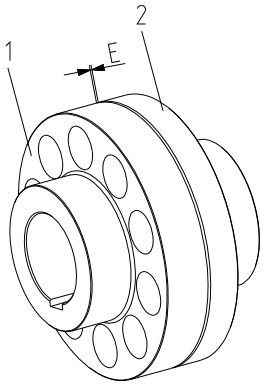


picture 15

**Applies only for taper pin design B:**

- Insert the pins (component 3a) into the hub part 1 (component 1) (see picture 16).
- Screw up the pins to the hexagon head screws (component 3.4a) and tighten them evenly to the tightening torques mentioned in table 2 by means of a dynamometric screwdriver (see picture 16).

**C A U T I O N !**
**Secure screws against relieving by means of glue (e. g. Loctite 243 medium-tight).**

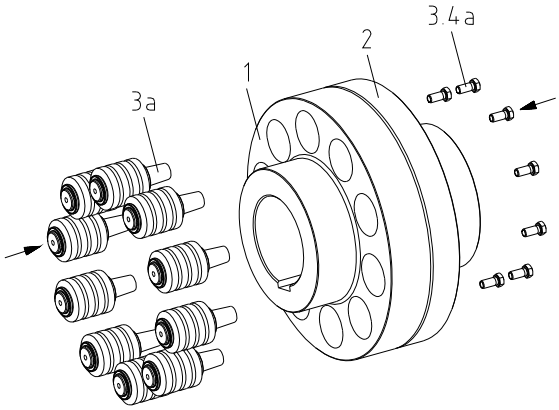


picture 16

## 4 Assembly

### 4.4 Assembly of the type KX

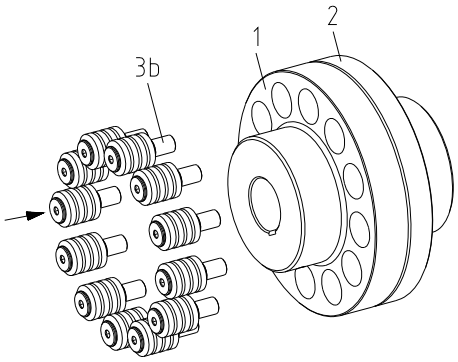


picture 17

**Applies only for cylindrical pin design A:**

- Drive the pins (component 3b) through the holes of the hub part 1 (component 1) into the holes of the hub part 2 (component 2) by light strokes (see picture 17).
- Screw up the pins with the discs (component 3.3a) and hexagon head screws (component 3.4b) and tighten them evenly to the tightening torques mentioned in table 4 by means of a dynamometric screwdriver (see picture 18).

**C A U T I O N !**
**Secure screws against relieving by means of glue (e. g. Loctite 243 medium-tight).**

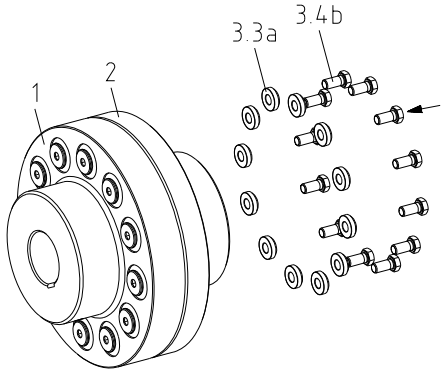


picture 18

### 4.5 Assembly of the type KX-D

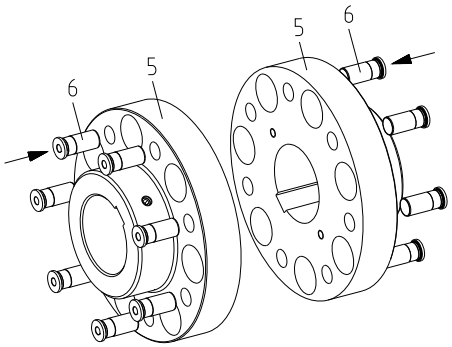


picture 19

**Applies only for taper pin design B:**

- Drive the sleeves (component 6) into the smaller bores of the hub part 5 (component 5) by light strokes (see picture 19).

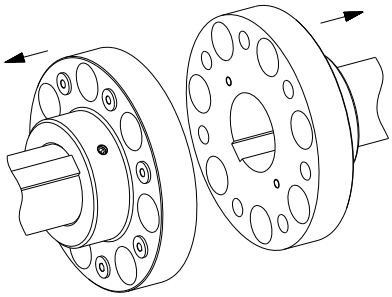

picture 20

**Applies for pin design A and B:**

- Please assemble the hubs onto the shafts of the drive and driven side in a way that the end faces of the coupling hubs are flush with the faces of the shafts (see picture 20).

## 4 Assembly

### 4.5 Assembly of the type KX-D

**Applies for pin design A and B:**

- Move the power packs in axial direction until the dimension E is achieved (see picture 21).
- If the power packs are already firmly assembled, axial movement of the hubs on the shafts allows for adjusting the dimension E.
- Fasten the hubs by tightening the setscrews DIN EN ISO 4029 at the tightening torque acc. to table 11.
- Align the coupling hubs in a way that the bores for the pins are in alignment.

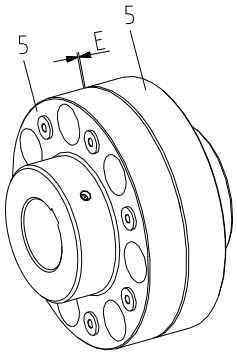

picture 21

**C A U T I O N !**
**Please consider permissible shaft displacements from chapter 4.7!**

**Applies only for taper pin design B:**

- Insert the pins (component 3c) into the bigger holes of the hub part 5 (component 5) (see picture 22).
- Screw up the pins to the hexagon head screws (component 3.4c) and tighten them evenly to the tightening torques mentioned in table 6 by means of a dynamometric screwdriver (see picture 22).

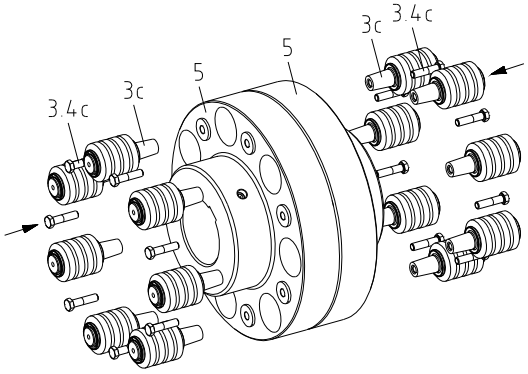

picture 22

**C A U T I O N !**
**Secure screws against relieving by means of glue (e. g. Loctite 243 medium-tight).**

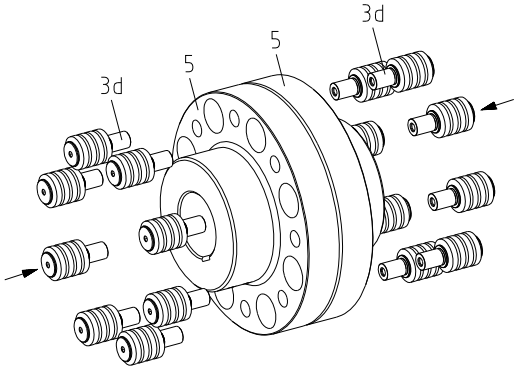

picture 23

**Applies only for cylindrical pin design A:**

- Drive the pins (component 3d) through the bigger holes of the hub into the smaller holes of the second hub by light strokes (see picture 23).
- Screw up the pins with the discs (component 3.3a) and hexagon head screws (component 3.4d) and tighten them evenly to the tightening torques mentioned in table 8 by means of a dynamometric screwdriver (see picture 24).

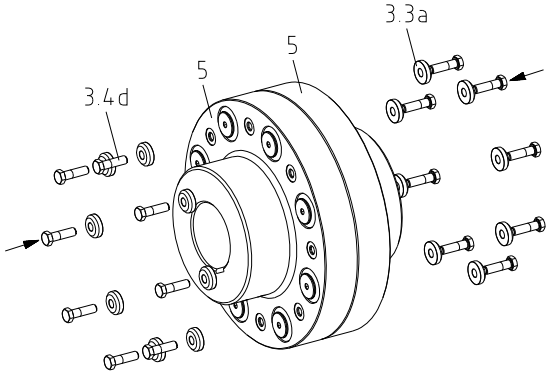

picture 24

**C A U T I O N !**
**Secure screws against relieving by means of glue (e. g. Loctite 243 medium-tight).**

## 4 Assembly

### 4.6 Hints Regarding the Finish Bore

**D A N G E R !**
**The maximum permissible bore diameters d (see table 1 to 8 in chapter 1 - Technical Data) must not be exceeded. If these figures are disregarded, the coupling may tear. Rotating particles may cause serious danger.**

- Hub bores machined by the customer have to observe concentric running or axial running, respectively (see picture 25).
- Please make absolutely sure to observe the figures for $d_{max}$.
- Carefully align the hubs when the finish bores are brought in.
- The bore tolerance should be selected as per table 12 preferably.
- Please use a setscrew according to DIN EN ISO 4029 with a cup point or an end plate to fasten the hubs axially.

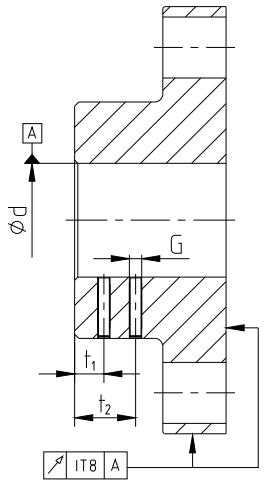

picture 25: concentric running and axial running

**C A U T I O N !**
**The orderer is responsible for all subsequently made machinings to unbored or pilot bored and to finish machined coupling parts and spare parts. KTR does not assume any warranty claims resulting from insufficient refinish.**

**P R E C A U T I O N !**
**Any mechanical rework to couplings that are used in hazardous areas require an explicit release by KTR.**
**The orderer must send a drawing to KTR acc. to which the manufacture must be made. KTR checks this drawing and returns it to the orderer with approval.**
**KTR supplies unbored or pilot bored coupling parts and spare parts on explicit customer´s request. These parts are additionally labelled with the symbol Ⓤ.**

**Table 11: Setscrews DIN EN ISO 4029**

| Size (KX / KX-D) | 105 | 120 | 135 | 150 | 170 | 190 | 215 | 240 | 265 | 280 | 305 | 330 | 355 | 370 |
|---|---|---|---|---|---|---|---|---|---|---|---|---|---|---|
| Dimension G [mm] | M20 | M24 | M24 | M24 | M24 | M24 | M24 | M24 | M24 | M24 | M24 | M24 | M24 | M24 |
| Dimension $t_1$ [mm] | 40 | 30 | 45 | 45 | 50 | 50 | 50 | 50 | 60 | 70 | 70 | 70 | 80 | 80 |
| Dimension $t_2$ [mm] | - | - | - | - | - | - | 110 | 110 | 120 | 140 | 150 | 150 | 160 | 160 |
| Tightening torque $T_A$ [Nm] | 140 | 220 | 220 | 220 | 220 | 220 | 220 | 220 | 220 | 220 | 220 | 220 | 220 | 220 |

**Table 12: Recommended combinations of fit acc. to DIN 748/1**

| Bore [mm] | | Shaft tolerance | Bore tolerance |
|---|---|---|---|
| above | to | | |
| | 50 | k6 | H7 (KTR-Standard) |
| 50 | | m6 | |

## 4 Assembly

### 4.6 Hints Regarding the Finish Bore

If a feather key is intended to be used in the hub, it should correspond to the tolerance ISO JS9 (KTR-Standard) with normal operating conditions or ISO P9 with heavy operating conditions (frequently alternating torsional direction, shock loads, etc.). In this case the keyway should be flush with one of the hub bores for the pins. For the axial fastening of the set screw the tapping should be made on the keyway.

The transmissible torque of the shaft/hub connection must be checked by the orderer, and he is responsible for the same.

Unbored/pilot bored hubs are supplied without balancing. If balancing is necessary subject to the application, it should be made after having completed the finish bore. The balancing bores have to be made in the positions marked in picture 26.

**C A U T I O N !**
**The balancing bores have to be made between the pin bores in every case.**

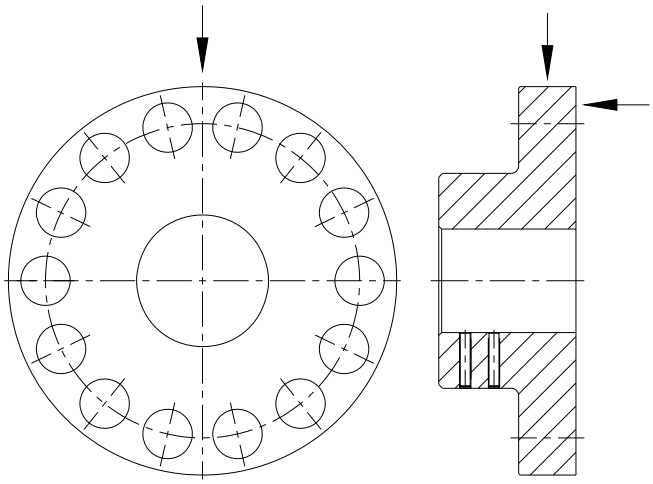

picture 26

### 4.7 Displacements - Alignment of the Couplings

**REVOLEX® KX / KX-D** is able to compensate for displacements of the shafts to be combined as mentioned in table 13. Excessive misalignment may be produced by improper alignment, production tolerances, heat expansion, shaft bending, twisting of machine frames, etc.

**C A U T I O N !**
**In order to ensure a long lifetime of the coupling and to avoid dangers regarding the use in hazardous areas, the shaft ends must be accurately aligned.**
**Please absolutely observe the displacement figures indicated (see table 13). If the figures are exceeded, the coupling is damaged.**
**The exacter the alignment of the coupling, the higher is its lifetime.**
**In case of a use in hazardous areas for the explosion group IIC (marking II 2GD c IIC T X), only the half displacement figures (see table 13) are permissible.**

**Please note:**

- The displacement figures mentioned in table 13 are maximum figures which must not arise in parallel. If both radial and angular displacements are produced in parallel, the sum of the displacement figures must not exceed $\Delta K_r$ or $\Delta K_w$, respectively (see picture 28).
- Please check with a dial gauge, ruler, feeler or laser measuring device whether the permissible displacement figures of table 13 can be observed.

## 4 Assembly

### 4.7 Displacements - Alignment of the Couplings

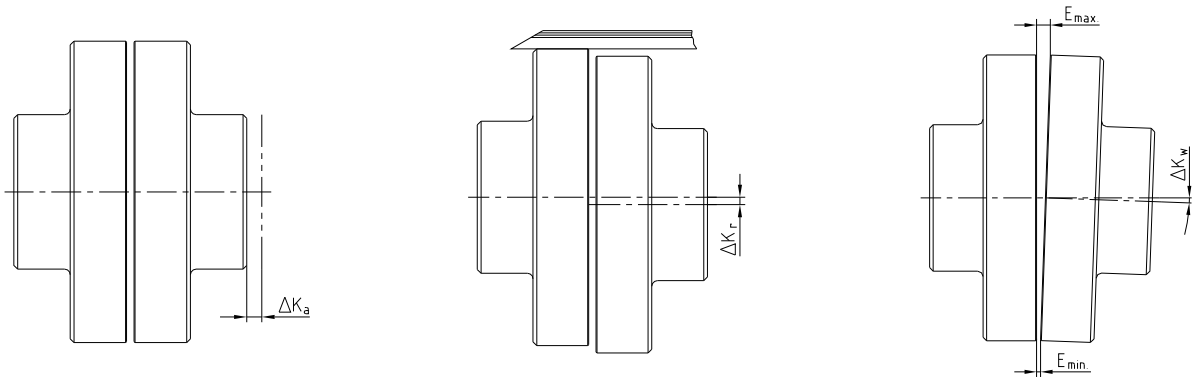


Axial displacements | Radial displacements | Angular displacements

$L_{perm.} = L + \Delta K_a$ [mm]

$\Delta K_w = E_{max.} - E_{min.}$ [mm]

picture 27: displacements

Example for the misalignment combinations given in picture 28:

Example 1:
$\Delta K_r$ = 30 %
$\Delta K_w$ = 70 %

Example 2:
$\Delta K_r$ = 60 %
$\Delta K_w$ = 40 %

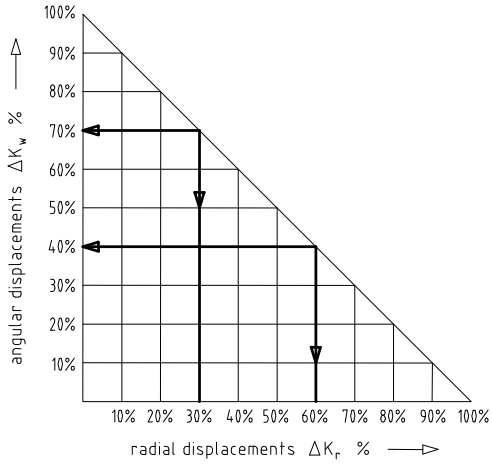


picture 28: combinations of displacement

$\Delta K_{total} = \Delta K_r + \Delta K_w \leq 100$ %

**Table 13: Displacement figures**

| Size (KX / KX-D) | | 105 | 120 | 135 | 150 | 170 | 190 | 215 | 240 | 265 | 280 | 305 | 330 | 355 | 370 |
|---|---|---|---|---|---|---|---|---|---|---|---|---|---|---|---|
| Max. axial displacement $\Delta K_a$ [mm] | | ±2 | ±2 | ±2 | ±2 | ±2,5 | ±2,5 | ±2,5 | ±2,5 | ±2,5 | ±2,5 | ±2,5 | ±4 | ±4 | ±4 |
| Max. radial displacement $\Delta K_r$ [mm] or max. angular displacement $\Delta K_w$ [mm] at speed n [$min^{-1}$] | 250 | 1,2 | 1,3 | 1,4 | 1,5 | 1,7 | 1,9 | 2,0 | 2,2 | 2,5 | 2,7 | 2,9 | 3,1 | 3,3 | 3,5 |
| | 500 | 0,9 | 0,9 | 1,0 | 1,1 | 1,2 | 1,3 | 1,4 | 1,6 | 1,7 | 1,9 | 2,0 | 2,2 | 2,3 | 2,5 |
| | 750 | 0,7 | 0,8 | 0,8 | 0,9 | 1,0 | 1,1 | 1,2 | 1,3 | 1,4 | 1,6 | 1,7 | 1,8 | 1,9 | 2,0 |
| | 1000 | 0,6 | 0,7 | 0,7 | 0,8 | 0,9 | 0,9 | 1,0 | 1,1 | 1,2 | 1,4 | 1,4 | 1,5 | 1,7 | 1,8 |
| | 1500 | 0,5 | 0,5 | 0,6 | 0,6 | 0,7 | 0,8 | 0,8 | 0,9 | 1,0 | - | - | - | - | - |
| | 2000 | 0,4 | 0,5 | 0,5 | 0,5 | 0,6 | 0,7 | - | - | - | - | - | - | - | - |
| | 3000 | 0,4 | 0,4 | - | - | - | - | - | - | - | - | - | - | - | - |

### 4.8 Spares Inventory, Customer Service Addresses

A basic requirement to guarantee the operational readiness of the coupling is a stock of the most important spare parts on site.

Contact addresses of the KTR partners for spare parts and orders can be obtained from the KTR homepage under www.ktr.com.

# 5 Enclosure A

## Hints and Instructions Regarding the Use in Ex Hazardous Areas

Type KX: Hub/Pin/Hub
Type KX-D: Hub/Pin/Hub

## 5.1 Use in Ex Hazardous Areas According to the Regulations

**Conditions of operation in Ex hazardous locations**

**REVOLEX®-KX / KX-D** couplings are suitable for the use according to EC standard 94/9/EC.

The couplings may only be used if their materials are resistant to mechanical and/or chemical influences under the different operating conditions in a way that the explosion protection is not eliminated.
All metallic components of a coupling half have to be connected with each other being electroconductive and have to be earthed each by the shaft-hub-connection.

**1. Industry (with the exception of mining)**

- device class II of category 2 and 3 (*coupling is not approved for device class 1*)
- media class G (*gases, fogs, steams*), zone 1 and 2 (*coupling is not approved for zone 0*)
- media class D (*dusts*), zone 21 and 22 (*coupling is not approved for zone 20)*
- explosion class IIC (*explosion class IIA and IIB are included in IIC*)

**Temperature class:**

| Temperature class | Ambient or operating temperature $T_a$ | Max. surface temperature |
|---|---|---|
| T4, T3, T2, T1 | - 30 °C to + 80 °C [1)] | 100 °C [2)] |
| T5 | - 30 °C to + 80 °C | 100 °C |
| T6 | - 30 °C to + 65 °C | 85 °C |

Explanation:
The maximum surface temperatures result from each the maximum permissible ambient or operating temperature $T_a$ plus the maximum temperature increase $\Delta T$ of 20 K which has to be taken into account.

1) The ambient or operating temperature $T_a$ is limited to + 90 °C due to the permissible permanent operating temperature of the elastomers used.

2) The maximum surface temperature of 100 °C applies for the use in locations which are potentially subject to dust explosion, too.

**2. Mining**

Device class I of category M2 (coupling is not approved for device category M1).
Permissible ambient temperature - 30 °C to + 80 °C.

In addition the current national mining instructions which each apply for the application have to be respected for the use in mining.

## 5 Enclosure A

## Hints and Instructions Regarding the Use in Ex Hazardous Areas

### 5.2 Control Intervals for Couplings in Ex Hazardous Areas

| Explosion group | Control intervals |
|---|---|
| 3G<br>3D | For couplings which are classified in category 3G or 3D the operating and assembly instructions that are usual for standard operation apply. During the standard operation which has to be subject to the analysis of danger of ignition the couplings are free from any ignition source. Merely the temperature increase produced by proper heating and depending on the coupling type has to be considered:<br>for REVOLEX® KX / KX-D: $\Delta T = 20$ K |
| II 2G c IIB<br>T4, T5, T6 | A checking of the circumferential backlash and a visual check of the elastomer rings must be effected after 3,000 operating hours for the first time, after 6 months at the latest.<br>Except for centered, stiff connecting flanges (e. g. bellhousings).<br>If you note an unconsiderable or no wear at the elastomer ring after this first inspection, the further inspections can be effected, in case of the same operating parameters, respectively after 6,000 operating hours or after 18 months at the latest.<br>If you note a considerable wear during the first inspection, so that a change of the elastomer ring would be recommended, please find out the cause according to the table „Breakdowns“, as far as possible.<br>The maintenance intervals must be adjusted according to the changed operating parameters. |
| II 2G c IIC<br>T4, T5, T6 | A checking of the circumferential backlash and a visual check of the elastomer rings must be effected after 2,000 operating hours for the first time, after 3 months at the latest.<br>Except for centered, stiff connecting flanges (e. g. bellhousings).<br>If you note an unconsiderable or no wear at the elastomer ring after this first inspection, the further inspections can be effected, in case of the same operating parameters, respectively after 4,000 operating hours or after 12 months at the latest.<br>If you note a considerable wear during the first inspection, so that a change of the elastomer ring would be recommended, please find out the cause according to the table „Breakdowns“, as far as possible.<br>The maintenance intervals must be adjusted according to the changed operating parameters. |

## 5 Enclosure A

## Hints and Instructions Regarding the Use in Ex Hazardous Areas

### 5.3 Approximate Values of Wear

The reaching of the exchange values depends on the operating conditions and the existing operating parameters.

With a twisting backlash ≥ $\Delta s_{max}$ in mm or a wall thickness $X_{mind.}$ in mm the elastomer rings need to be replaced.

**C A U T I O N !**
**In order to ensure a long lifetime of the coupling and to avoid dangers regarding the use in hazardous areas, the shaft ends must be accurately aligned.**
**Please absolutely observe the displacement figures indicated (see table 13). If the figures are exceeded, the coupling is damaged.**

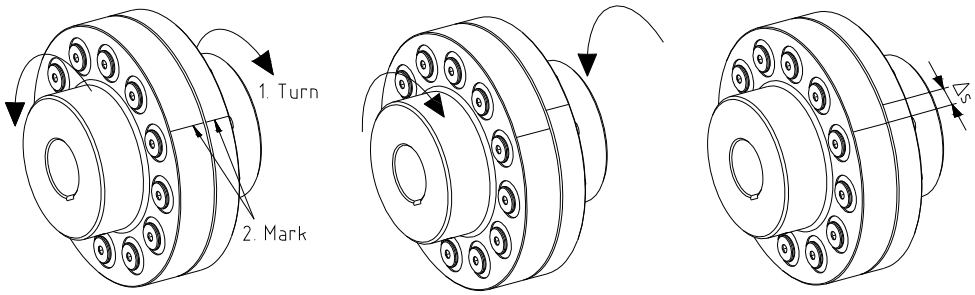


picture 27: checking of the limit of wear

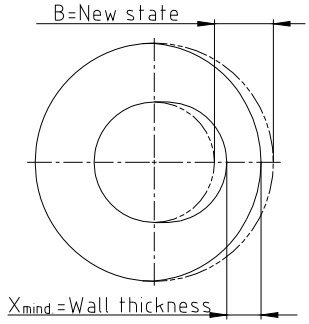


picture 28: wear of elastomer ring

**Table 14:**

| Size | Limits of wear [mm] | | | | Size | Limits of wear [mm] | | | |
|---|---|---|---|---|---|---|---|---|---|
| | Diameter of elastomer | New state B | Wall thickness $X_{mind.}$ | Circumferential backlash $\Delta s_{max.}$ | | Diameter of elastomer | New state B | Wall thickness $X_{mind.}$ | Circumferential backlash $\Delta s_{max.}$ |
| 105 | 50,0 | 12,25 | 8,6 | 5 | 240 | 113,7 | 27,65 | 19,4 | 11 |
| 120 | 63,0 | 16,15 | 11,3 | 6 | 265 | 113,7 | 27,65 | 19,4 | 11 |
| 135 | 63,0 | 16,15 | 11,3 | 6 | 280 | 113,7 | 27,65 | 19,4 | 11 |
| 150 | 63,0 | 16,15 | 11,3 | 6 | 305 | 113,7 | 27,65 | 19,4 | 11 |
| 170 | 85,5 | 21,15 | 14,8 | 9 | 330 | 113,7 | 27,65 | 19,4 | 11 |
| 190 | 85,5 | 21,15 | 14,8 | 9 | 355 | 113,7 | 27,65 | 19,4 | 11 |
| 215 | 85,5 | 21,15 | 14,8 | 9 | 370 | 113,7 | 27,65 | 19,4 | 11 |

### 5.4 Permissible Coupling Materials in the Ex Hazardous Area

In the Explosion Groups **IIA, IIB** and **IIC** the following materials may be combined:
EN-GJL-250 (old designation GG 25)
EN-GJS-400-15 (old designation GGG 40)

Semifinished products from aluminium with a magnesium part of up to 7,5 % and a yield point of $R_{p0,2}$ ≥ 250 N/mm$^2$ are permitted for the use in hazardous areas.
**Aluminium diecast** is generally excluded for hazardous areas.

## 5 Enclosure A

## Hints and Instructions Regarding the Use in Ex Hazardous Areas

### 5.5 Ex Marking of Coupling for the Hazardous Area

Couplings for the use in explosion-proof areas are marked fully or in part on one component at least each for the permissible operating conditions. The pins with elastomer rings are not marked.

Complete labelling: Ex **II 2G c IIC T6 bzw. T5** - 30 °C $\leq T_a \leq$ + 65 °C bzw. + 80 °C
**II 2D c T 100 °C** - 30 °C $\leq T_a \leq$ + 80 °C / **I M2 c** - 30 °C $\leq T_a \leq$ + 80 °C

Short labelling: Ex **II 2GD c IIC T X / I M2 c TX**

The labelling with Explosion Group IIC includes the Explosion Groups IIA and IIB.

If the coupling part is labelled with Ⓤ in addition to Ex, KTR supplied it unbored or pilot bored.

**C A U T I O N !**
**Any mechanical rework to couplings that are used in hazardous areas require an explicit release by KTR.**
**The orderer must send a drawing to KTR acc. to which the manufacture must be made. KTR checks this drawing and returns it to the orderer with approval.**

### 5.6 Starting

Before putting the coupling into operation, check the tightness of the setscrews in the hubs, the alignment and the distance dimension E and correct, if necessary, and also check all screw connections regarding the stipulated tightening torques dependent on the type of coupling.

Ex If used in hazardous areas the grub screws to fix the hub as well as all screw connections must be additionally secured against self-loosening, e. g. glue with Loctite (medium strength).

Last but not least, the coupling protection against unintended contact must be fixed.

The cover must be electrically conductive and be included in the equipotential bonding. Bellhousings (magnesium part below 7,5 %) made from aluminium and damping rings (NBR) can be used as connecting element between pump and electro motor. The cover may only be taken off after having stopped the unit.

During operation, please pay attention to

- strange running noises
- occurring vibrations.

If the couplings are used in dust explosive areas and in mining the user must make sure that there is no accumulation of dust in a critical quantity between the cover and the coupling. The coupling must no operate in an accumulation of dust.

For covers with unlocked openings on the upper side no light metals may be used if the couplings are used as appliances of appliance group II (*if possible, from stainless steel*).
If the couplings are used in mining (appliance group I M2), the cover must not be made from light metal. In addition, it must be resistant to higher mechanical loads than if it is used as appliance of appliance group II.

## 5 Enclosure A

## Hints and Instructions Regarding the Use in Ex Hazardous Areas

### 5.6 Starting

The minimum distance „Sr“ between the protection device and the rotating parts must at least correspond to the figures mentioned below.

If the protection device is used as cover, regular openings complying with the explosion protection demands can be made that must not exceed the following dimensions:

| Openings | Cover [mm] | | |
|---|---|---|---|
| | Top side | Lateral parts | Distance „Sr“ |
| Circular - max. diameter | 4 | 8 | ≥ 10 |
| Rectangular - max. lateral length | 4 | 8 | ≥ 10 |
| Straight or curved slot - max. lateral length/height | prohibited | 8 | ≥ 20 |

**C A U T I O N !**
**If you note any irregularities at the coupling during operation, the drive unit must be turned off immediately. The cause of the breakdown must be found out with the table „Breakdowns“ and, if possible, be eliminated according to the proposals. The possible breakdowns mentioned can be hints only. To find out the cause all operating factors and machine components must be considered.**

**Coupling layer:**

If coated (priming, painting etc.) couplings are used in hazardous areas, the requirements to conductability and layer thickness must be considered. In case of paintings up to 200 µm no electrostatic load can be expected. Multiple coatings that are thicker than 200 µm are prohibited for explosion group IIC.

### 5.7 Breakdowns, Causes and Elimination

The below-mentioned errors can lead to an incorrect use of the **REVOLEX® KX / KX-D** coupling. In addition to the stipulations in these operating and mounting instructions please make sure to avoid these errors.
The errors listed can only be clues to search for the errors. When searching for the error the adjacent components must be generally included.

Due to incorrect use the coupling can become a source of ignition.
EC Standard 94/9/EC requires a special care from the manufacturer and the user.

**General errors incorrect use**

- Important data for the coupling selection was not forwarded.
- The calculation of the shaft/hub connection was not considered.
- Coupling parts with damage occurred during transport are assembled.
- If the heated hubs are assembled, the permissible temperature is exceeded.
- The fits of the parts to be assembled are not coordinated with each other.
- Tightening torques are below/exceeded.
- Components are exchanged by mistake/put together incorrectly.
- A wrong or no pin/elastomer ring is inserted into the coupling.
- No original KTR parts (purchased parts) are used.
- Old/already worn out or superimposed elastomer rings are used. Old/already worn out elastomer rings or elastomer rings stored too long are used.
- The coupling used/the coupling protection used is not suitable for the operation in hazardous areas and does not correspond to EC Standard 94/9/EC, respectively.
- Maintenance intervals are not observed.

## 5 Enclosure A

## Hints and Instructions Regarding the Use in Ex Hazardous Areas

### 5.7 Breakdowns, Causes and Elimination

| Breakdowns | Causes | Elimination |
|---|---|---|
| Change of the running noises and/or occurring vibrations | Misalignment | 1) Put the unit out of operation<br>2) Eliminate the reason for the misalignment (e. g. loose foundation bolts, break of the engine fixing, heat expansion of unit components, change of the assembly dimension E of the coupling)<br>3) Checking of wear see under point Control |
| | Wear of elastomers | 1) Put the unit out of operation<br>2) Disassemble the coupling and remove rests of the elastomer ring/pin<br>3) Check coupling parts and exchange damaged coupling hubs<br>4) Generally assemble new elastomer rings with new pins<br>5) Assemble the coupling components<br>6) Check alignment, correct if necessary |
| | Thread for setscrews for axial fastening of hubs is loose | 1) Put the unit out of operation<br>2) Review the coupling alignment<br>3) Tighten the thread for setscrews for fastening of the hubs against slackening<br>4) Checking of wear see under point Control |
| Break of hub | Fracture of the hub due to high shock energy/overload | 1) Put the unit out of operation<br>2) Change complete coupling<br>3) Find out the reason of overload<br>4) Check alignment |
| | Operating parameters do not correspond to the performance of the coupling | 1) Put the unit out of operation<br>2) Check the operating parameters and select a larger coupling (consider installation space)<br>3) Assemble new coupling size<br>4) Check alignment |
| | Mistake in service of the unit | 1) Put the unit out of operation<br>2) Change complete coupling<br>3) Check alignment<br>4) Instruct and train the service staff |

## 5 Enclosure A

## Hints and Instructions Regarding the Use in Ex Hazardous Areas

### 5.7 Breakdowns, Causes and Elimination

| Breakdowns | Causes | Elimination |
|---|---|---|
| Early wear of the elastomer | e. g. contact with aggressive liquids/ oils, ozone-influence, too high/low ambient temperatures etc. effecting a physical change of the elastomer ring | 1) Put the unit out of operation<br>2) Disassemble the coupling and remove rests of the elastomer ring/pin<br>3) Check coupling parts and exchange damaged coupling hubs<br>4) Generally assemble new elastomer rings with new pins<br>5) Assemble the coupling components<br>6) Check alignment, correct if necessary<br>7) Please make sure that other physical modifications of the pins are excluded |
| | ambient/contact temperatures which are too high for the elastomer ring, max. permissible -30 °C/+80 °C | 1) Put the unit out of operation<br>2) Disassemble the coupling and remove rests of the elastomer ring/pin<br>3) Check coupling parts and exchange damaged coupling hubs<br>4) Generally assemble new elastomer rings with new pins<br>5) Assemble the coupling components<br>6) Check alignment, correct if necessary<br>7) Review and regulate the ambient/contact temperature |
| Early wear of pins (hardening/embrittlement of the pin elastomer) | Drive vibrations | 1) Put the unit out of operation<br>2) Disassemble the coupling and remove rests of the elastomer ring/pin<br>3) Determine the reason for vibrations<br>4) Check coupling parts and exchange damaged coupling hubs<br>5) Generally assemble new elastomer rings with new pins<br>6) Assemble the coupling components<br>7) Check alignment, correct if necessary |

Ex If you operate with a worn elastomer rings (see item 5.3) and the subsequent contact of metal parts a due operation meeting the explosion protection requirements and acc. to Standard 94/9/EC is not ensured.

☞ **A T T E N T I O N !**
**KTR does not assume any liabilities or guarantees regarding the use of spare parts and accessories which are not provided by KTR and for the damages resulting herefrom.**

## 5 Enclosure A

## Hints and Instructions Regarding the Use in Ex Hazardous Areas

### 5.8 Rating of Danger of Ignition

| Source of danger | Elimination |
|---|---|
| Inaccurate coupling assembly | With a rough error in assembly the two coupling flanges being opposite to each other might touch (e. g. with angular displacements exceeding the permissible tolerances by far) or the elastomers might be squeezed out exceeding their load limit (e. g. with impermissible radial displacement), but which may be avoided by a test run. |
| Hubs are loose on the shafts | The tight connection of the shaft-hub-connection should be inspected in regular intervals by the operator and re-arranged, if necessary. |
| Friction of foreign substances on the coupling | The couplings need to be protected against touching by suitable protective devices (e. g. solid covers) in order to exclude friction of foreign substances on the couplings as a failure expected. The minimum distance between the protective device and rotating parts has to be defined in a way that even if the protection against touching is damaged (e. g. dents), no friction is caused on the rotating coupling. Moreover, when defining the distance deflections caused by vibrations of the shaft need to be taken into account.<br>For the use of couplings in mining the protective device needs to be particularly rugged to make sure that the damage which may not be excluded with the rough operating conditions (e. g. by impressing) does not cause trailing/friction on the coupling. Moreover, the protective devices in mining must not consist of light-weight metals.<br>*The protective device for mining has to pass the bumping test as per EN 13463-5:2003, section 13.3.2.1, table 2 according to the degree of mechanical danger "high" (impact energy 20 J). This fact needs to be respected by the user (e. g. mechanical engineer) or the operator of the couplings.* |
| Contact/impact of foreign substances on the coupling | If the coupling gets in contact with objects, mechanical sparks may be produced each depending on the material and the energy of impact by swinging and striking against other objects (e. g. objects made of light-weight metal or rusty iron). Since the couplings have to be equipped with protective devices by the user which may have openings (see rules for protection against touching by rotating parts) for a better heat dissipation by convection, the contact or striking of dangerous objects on or against the couplings may be excluded as an expected failure.<br>For the protective device a material has to be used excluding the production of ignitable mechanical sparks as far as possible. |
| Dust deposit on couplings which are not dustproof all over | In order to ensure a troublefree normal operation even in an explosive dust atmosphere it has to be made sure that the couplings are inspected in regular intervals to be free from critical dust deposits (e. g. free from coating) and are not running in a dust accumulation. This needs to be observed particularly if the couplings are equipped with non-dustproof protective devices against touching.<br>Moreover, in places of work which are endangered to dust explosion as well as in mining a higher amount of wear of the elastomer rings has to be considered. The elastomer rings must not be worn off as much that the pins slide brightly in the holes. The source of ignition „self-ignition and glowing of dust deposits" cannot be assumed as an expected failure with a corresponding maintenance of the coupling. Here corresponding maintenance means that the couplings need to be inspected in regular intervals to make sure that they are free from dangerous dust deposits and are not running in a dust accumulation.<br>The corresponding inspection and cleaning rules have to be determined by the operator. The interval has to be determined depending on the operating conditions and safety specifications of dust like temperature of self-ignition and glowing at one's own responsibility. |

## 5 Enclosure A

## Hints and Instructions Regarding the Use in Ex Hazardous Areas

### 5.9 EC Certificate of Conformity

# EC Certificate of Conformity

corresponding to EC Standard 94/9/EC dated 23 March 1994
and to the legal regulations

The manufacturer - KTR Kupplungstechnik GmbH, D-48432 Rheine - states that the

**REVOLEX® KX / KX-D couplings**

described in these mounting instructions and explosion-proof designed correspond to Article 1 (3) b) of Standard 94/9/EC and comply with the general Safety and Health Requirements according to enclosure II of Standard 94/9/EC.

According to article 8 (1) of Standard 94/9/EC the technical documentation is deposited with the:

IBExU
Institut für Sicherheitstechnik GmbH
Fuchsmühlenweg 7

09599 Freiberg

| | | | |
|---|---|---|---|
| Rheine, | 15.07.09 | i. V. | i. V. |
| | Date | Reinhard Wibbeling<br>Engineering Manager | Michael Brüning<br>Product Manager |